TETON

PRE-MV BUILD

2008.02.14

DATE	CHANGE NO.	REV

	EE	DATE	POWER	DATE
DRAWER				
DESIGN				
CHECK				
RESPONSIBLE				

SIZE = 3 VER :

FILE NAME : XXXX-XXXXXX-XX

P/N XXXXXXXXXXXX

INVENTEC

TITLE TETON

SIZE	CODE	DOC. NUMBER	REV
A3	CS	Model_No	AX1

SHEET 1 OF 54

TABLE OF CONTENTS

PAGE

MAINBOARD

1.COVER PAGE
2.INDEX
3.BLOCK DIAGRAM
4.POWER SEQUENCE BLOCK
5-12.SYSTEM POWER
13.CLOCK GENERATOR
14-17.CPU Merom
18.FAN & THERMAL CONTROLLER
19-25.N/B Crestline
26.DDR2 DIMM0
27.DDR2 DIMM1
28.DDR DAMPING
29.MXM CONN
30.CRT CONN
31.HDMI & DP CONN
32.LCD CONN
33-37.S/B ICH8M
38.LAN CONTROLLER
39.RJ45 CONN
40.MINI CARD

PAGE

41.SATA HDD&ODD
42.USB CONN
43.BLUE TOOTH & MDC CONN
44.KBC
45.AUDIO CODEC
46.AUDIO JACK
47.AUDIO AMP
48.AUDIO AMP & SPK CONN
49.SCREW
50.MB TO OTHER B CONN
51.USB BOARD
52.POWER BUTTON BOARD
53.TP BUTTON BOARD
54.HINGE LED BOARD 1 & 2

PAGE

I/O BOARD

1.EXPRESS CARD CONN
2.CARD READER CONTROLLER

HOTKEY BOARD

1.HOTKEY BOARD

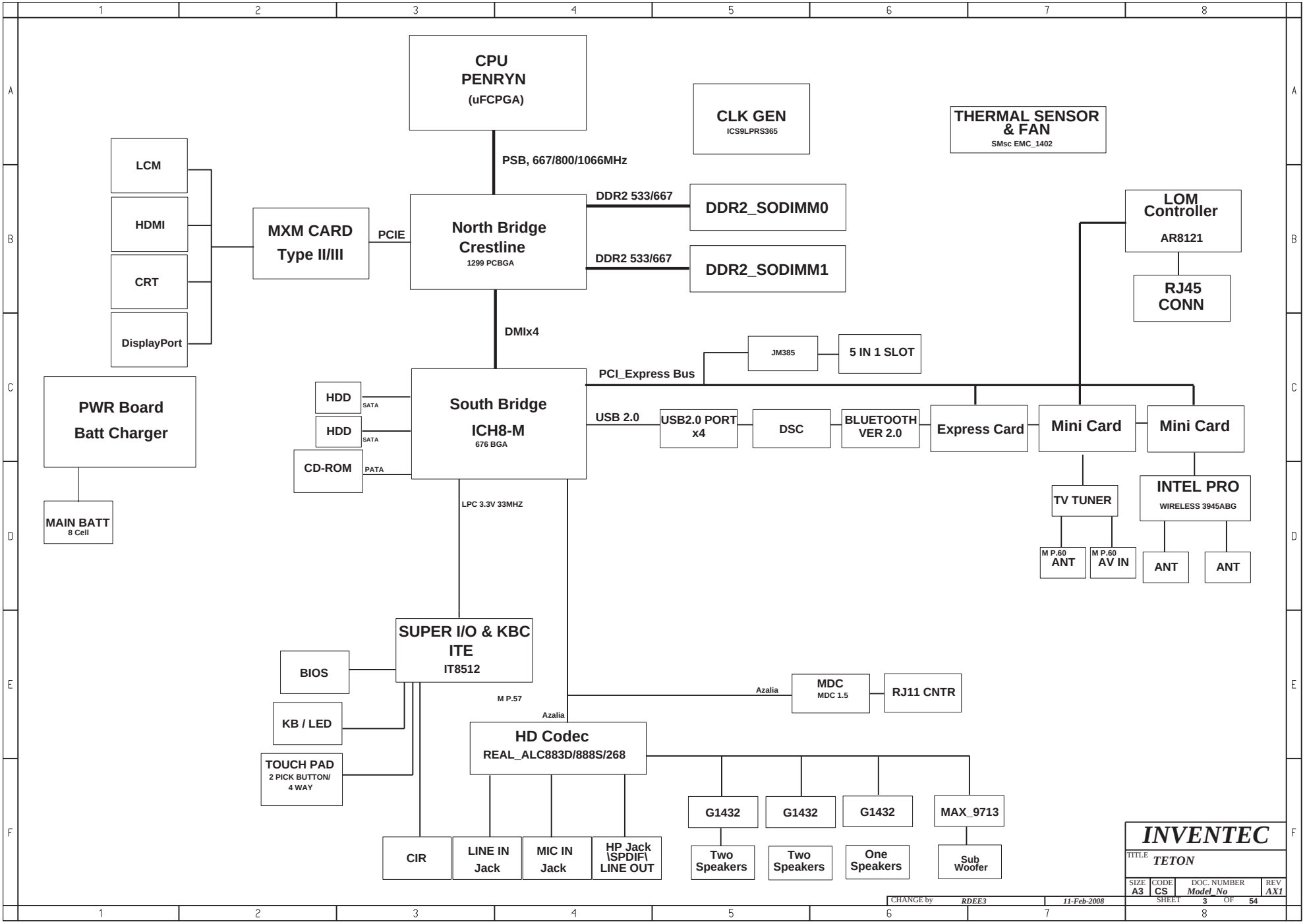
CPU
PENRYN
(uFCPGA)
CLK GEN
ICS9LPRS365
THERMAL SENSOR & FAN
SMsc EMC_1402
PSB, 667/800/1066MHz
LCM
HDMI
CRT
DisplayPort
MXM CARD
Type II/III
PCIE
North Bridge
Crestline
1299 PCBGA
DDR2 533/667
DDR2_SODIMM0
DDR2 533/667
DDR2_SODIMM1
LOM Controller
AR8121
RJ45 CONN
DMIx4
JM385
5 IN 1 SLOT
PCI_Express Bus
PWR Board
Batt Charger
HDD
SATA
HDD
SATA
CD-ROM
PATA
South Bridge
ICH8-M
676 BGA
USB 2.0
USB2.0 PORT x4
DSC
BLUETOOTH VER 2.0
Express Card
Mini Card
Mini Card
TV TUNER
INTEL PRO
WIRELESS 3945ABG
M P.60
ANT
M P.60
AV IN
ANT
ANT
MAIN BATT
8 Cell
LPC 3.3V 33MHZ
SUPER I/O & KBC
ITE
IT8512
BIOS
KB / LED
TOUCH PAD
2 PICK BUTTON/
4 WAY
M P.57
Azalia
MDC
MDC 1.5
RJ11 CNTR
Azalia
HD Codec
REAL_ALC883D/888S/268
G1432
G1432
G1432
MAX_9713
Two Speakers
Two Speakers
One Speakers
Sub Woofer
CIR
LINE IN Jack
MIC IN Jack
HP Jack \SPDIF\ LINE OUT
INVENTEC
TITLE TETON
SIZE A3
CODE CS
DOC. NUMBER Model_No
REV AX1
CHANGE by RDEE3
11-Feb-2008
SHEET 3 OF 54

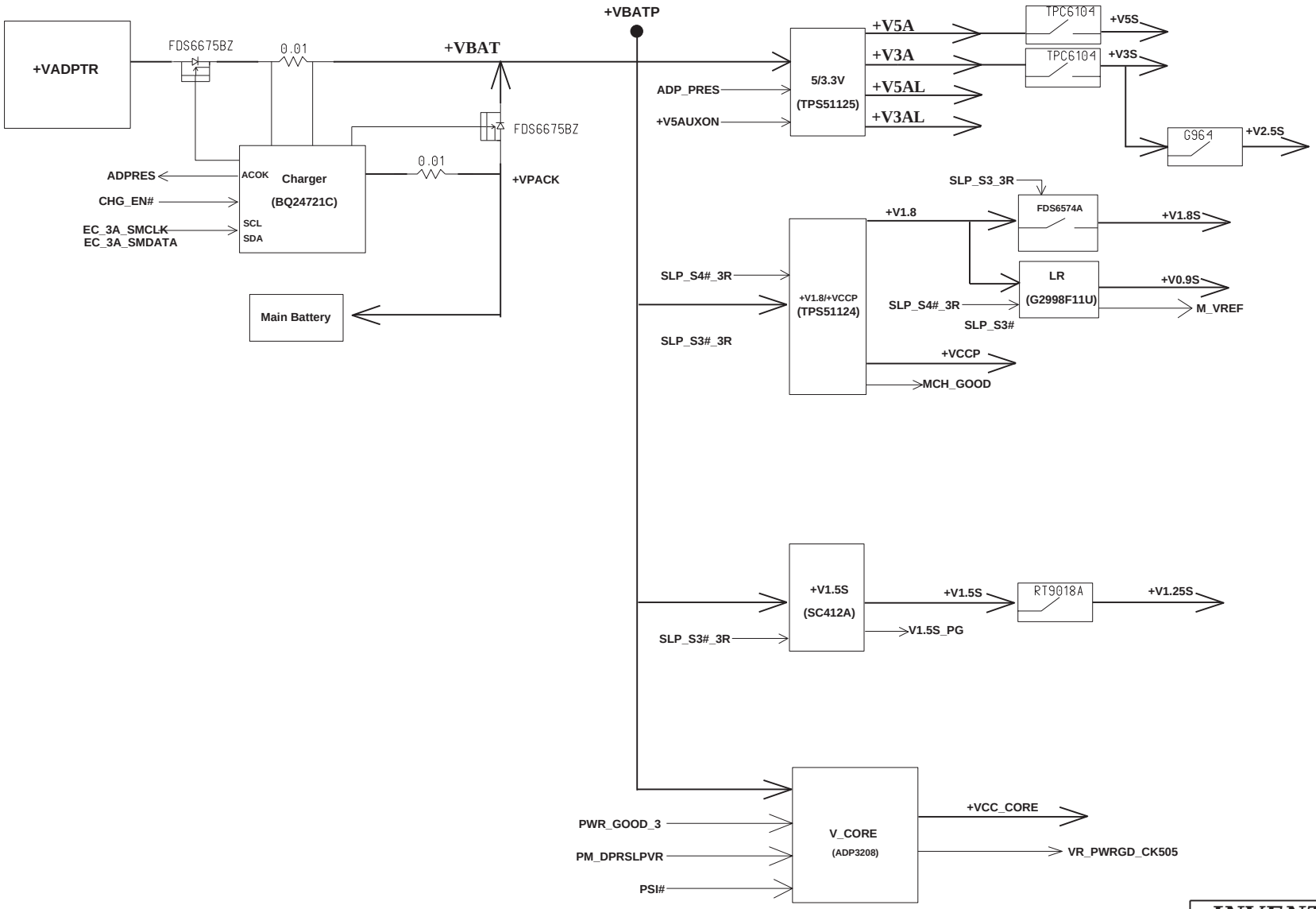

INVENTEC

TITLE TETON

SIZE	CODE	DOC. NUMBER	REV
A3	CS	Model_No	AX1

CHANGE by RDEE3 13-Jan-2008

SHEET 4 OF 54

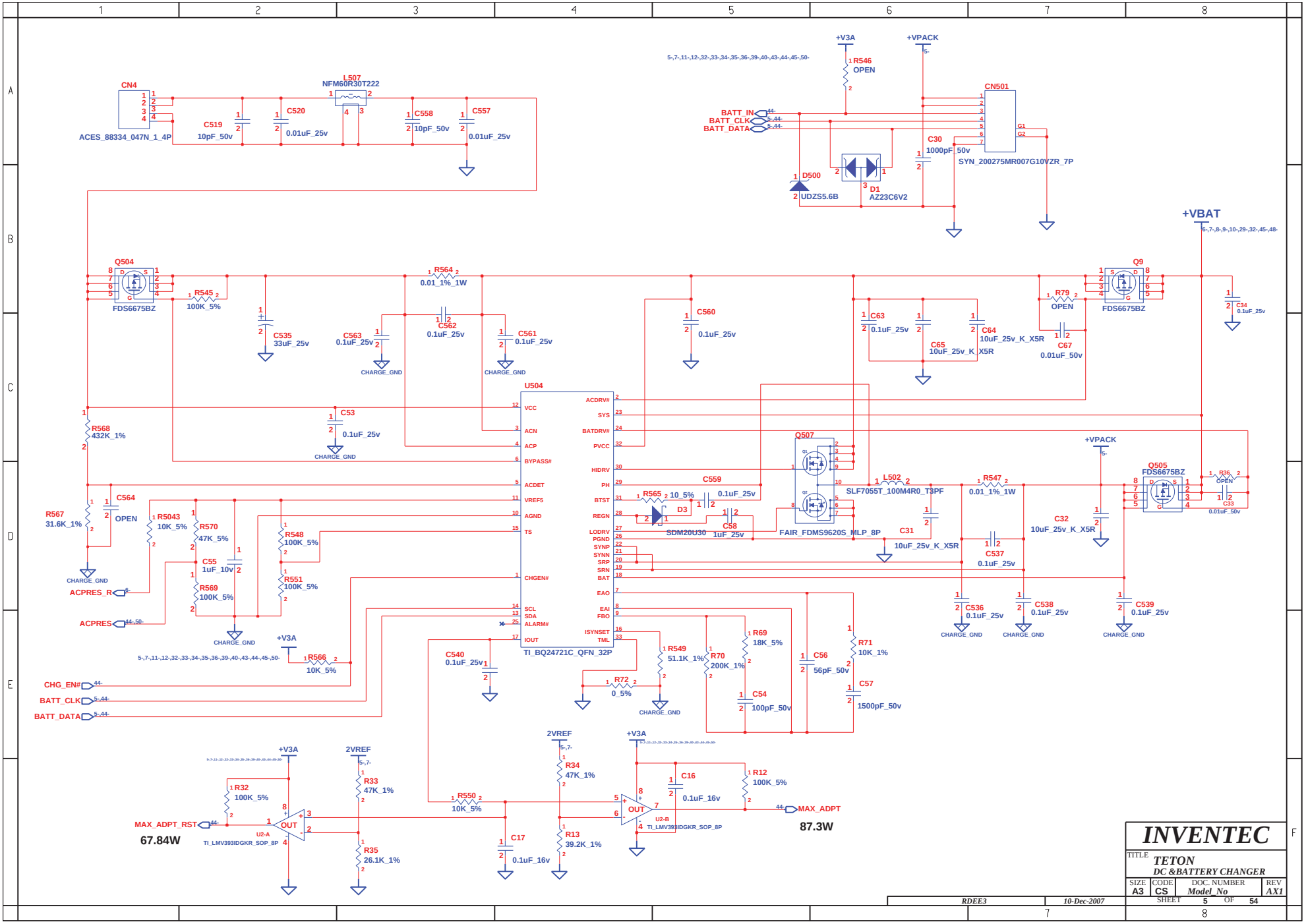
CN4
ACES_88334_047N_1_4P
L507
NFM60R30T222
C519
10pF_50v
C520
0.01uF_25v
C558
10pF_50v
C557
0.01uF_25v
+V3A
+VPACK
R546
OPEN
CN501
SYN_200275MR007G10VZR_7P
BATT_IN
BATT_CLK
BATT_DATA
C30
1000pF_50v
D500
UDZS5.6B
D1
AZ23C6V2
+VBAT
Q504
FDS6675BZ
R545
100K_5%
C535
33uF_25v
R564
0.01_1%_1W
C563
0.1uF_25v
C562
0.1uF_25v
C561
0.1uF_25v
CHARGE_GND
C560
0.1uF_25v
C63
0.1uF_25v
C65
10uF_25v_K_X5R
C64
10uF_25v_K_X5R
R79
OPEN
C67
0.01uF_50v
Q9
FDS6675BZ
C34
0.1uF_25v
U504
TI_BQ24721C_QFN_32P
VCC
ACN
ACP
BYPASS#
ACDET
VREF5
AGND
TS
CHGEN#
SCL
SDA
ALARM#
IOUT
ACDRV#
SYS
BATDRV#
PVCC
HIDRV
PH
BTST
REGN
LODRV
PGND
SYNP
SYNN
SRP
SRN
BAT
EAO
EAI
FBO
ISYNSET
TML
R568
432K_1%
C53
0.1uF_25v
R567
31.6K_1%
C564
OPEN
R5043
10K_5%
R570
47K_5%
C55
1uF_10v
R569
100K_5%
R548
100K_5%
R551
100K_5%
ACPRES_R
ACPRES
R566
10K_5%
CHG_EN#
BATT_CLK
BATT_DATA
R565
10_5%
D3
SDM20U30
C559
0.1uF_25v
C58
1uF_25v
Q507
FAIR_FDMS9620S_MLP_8P
L502
SLF7055T_100M4R0_T3PF
C31
10uF_25v_K_X5R
R547
0.01_1%_1W
C537
0.1uF_25v
C32
10uF_25v_K_X5R
Q505
FDS6675BZ
R36
OPEN
C33
0.01uF_50v
C536
0.1uF_25v
C538
0.1uF_25v
C539
0.1uF_25v
C540
0.1uF_25v
R549
51.1K_1%
R70
200K_1%
R69
18K_5%
C54
100pF_50v
R72
0_5%
C56
56pF_50v
R71
10K_1%
C57
1500pF_50v
2VREF
R32
100K_5%
R33
47K_1%
R35
26.1K_1%
MAX_ADPT_RST
67.84W
U2-A
TI_LMV393IDGKR_SOP_8P
R550
10K_5%
C17
0.1uF_16v
R34
47K_1%
R13
39.2K_1%
C16
0.1uF_16v
R12
100K_5%
U2-B
TI_LMV393IDGKR_SOP_8P
MAX_ADPT
87.3W
INVENTEC
TITLE
TETON
DC &BATTERY CHANGER
SIZE A3
CODE CS
DOC. NUMBER Model_No
REV AX1
SHEET 5 OF 54
RDEE3
10-Dec-2007

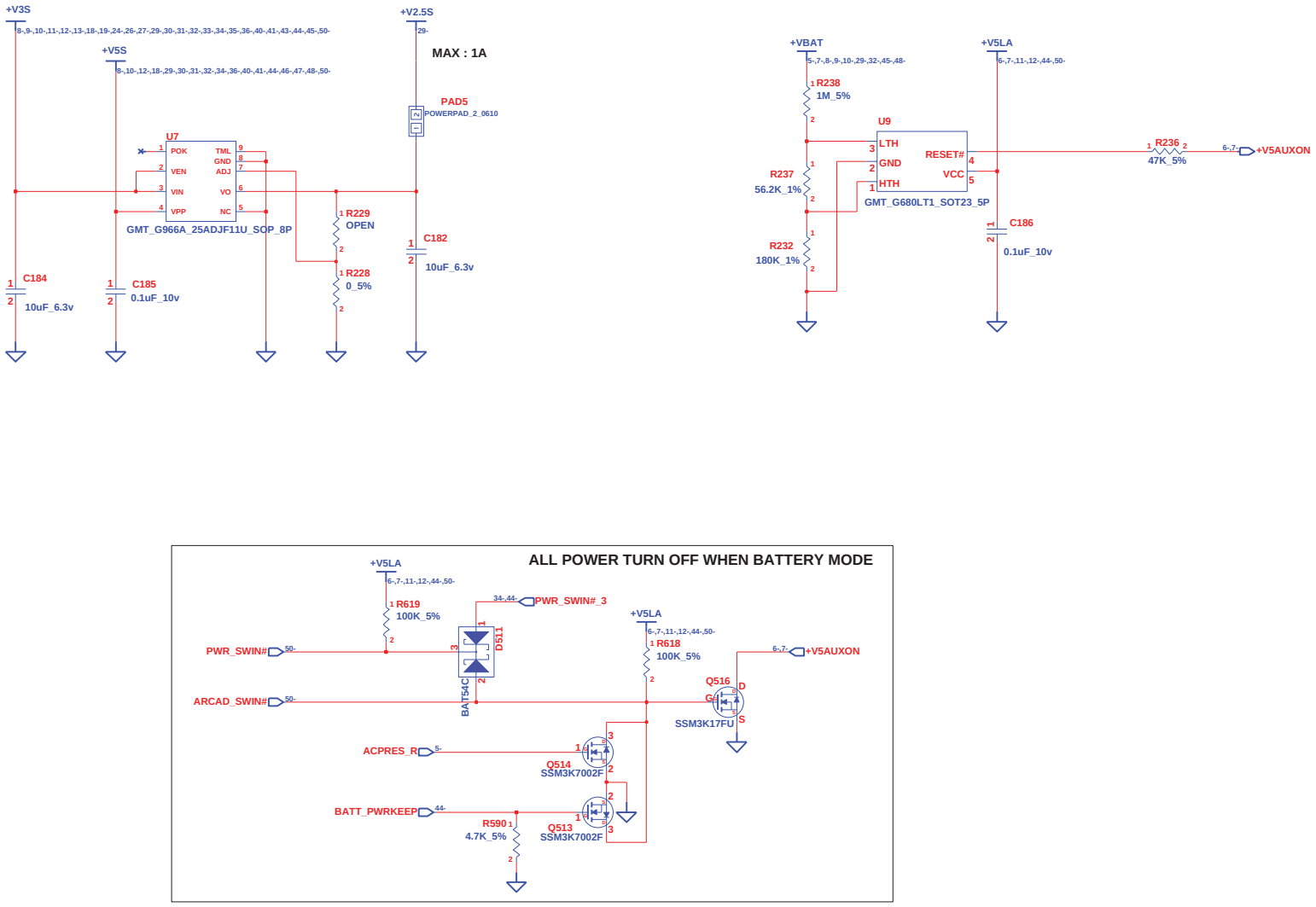

INVENTEC			
TITLE	TETON +V2.5S / RESET		
SIZE A3	CODE CS	DOC. NUMBER Model_No	REV AX1
CHANGE by RDEE3	10-Dec-2007	SHEET 6 OF 54	

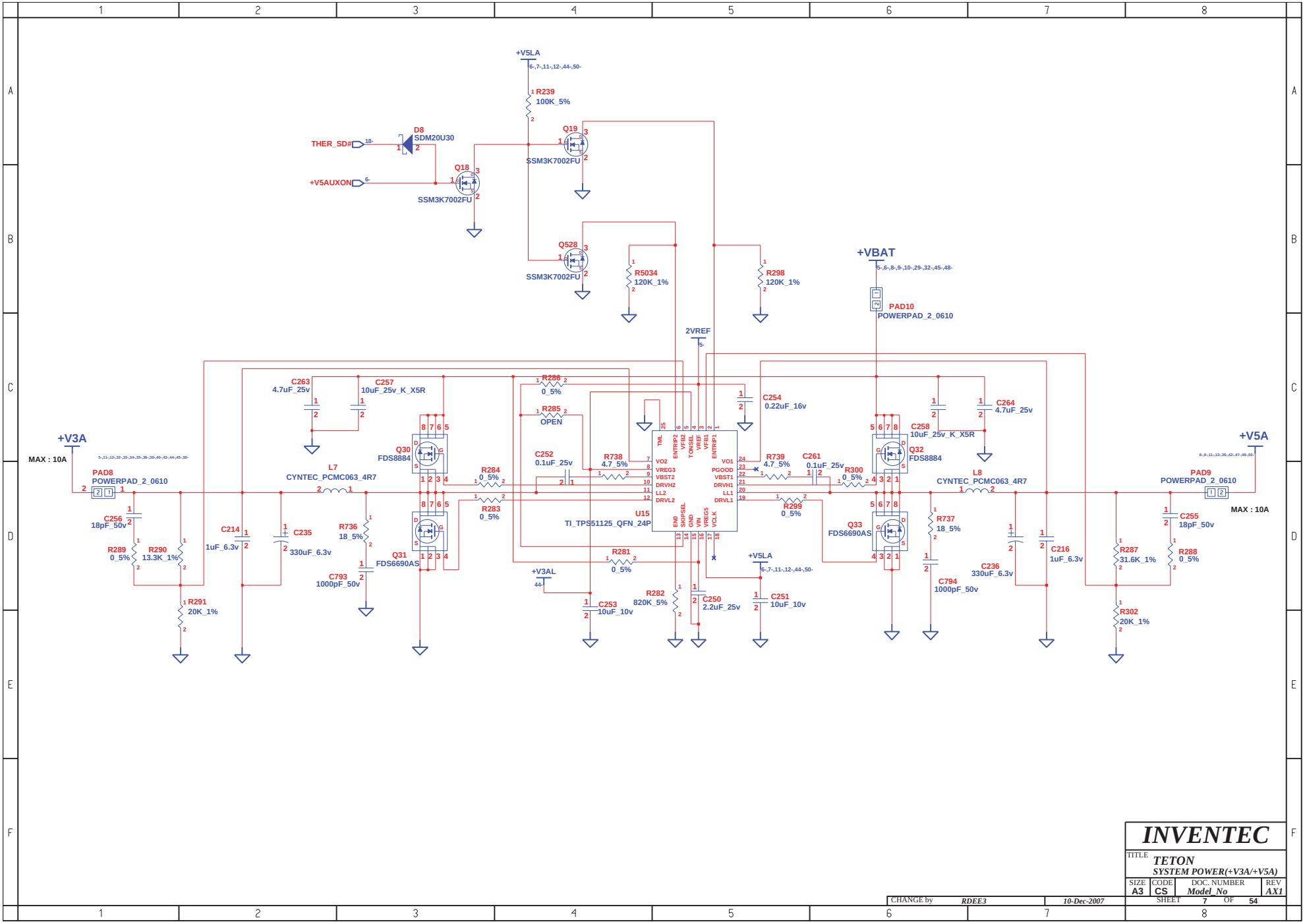

INVENTEC

TITLE **TETON**
SYSTEM POWER(+V3A/+V5A)

SIZE	CODE	DOC. NUMBER	REV
A3	CS	Model_No	AX1

CHANGE by RDEE3 | 10-Dec-2007 | SHEET 7 OF 54

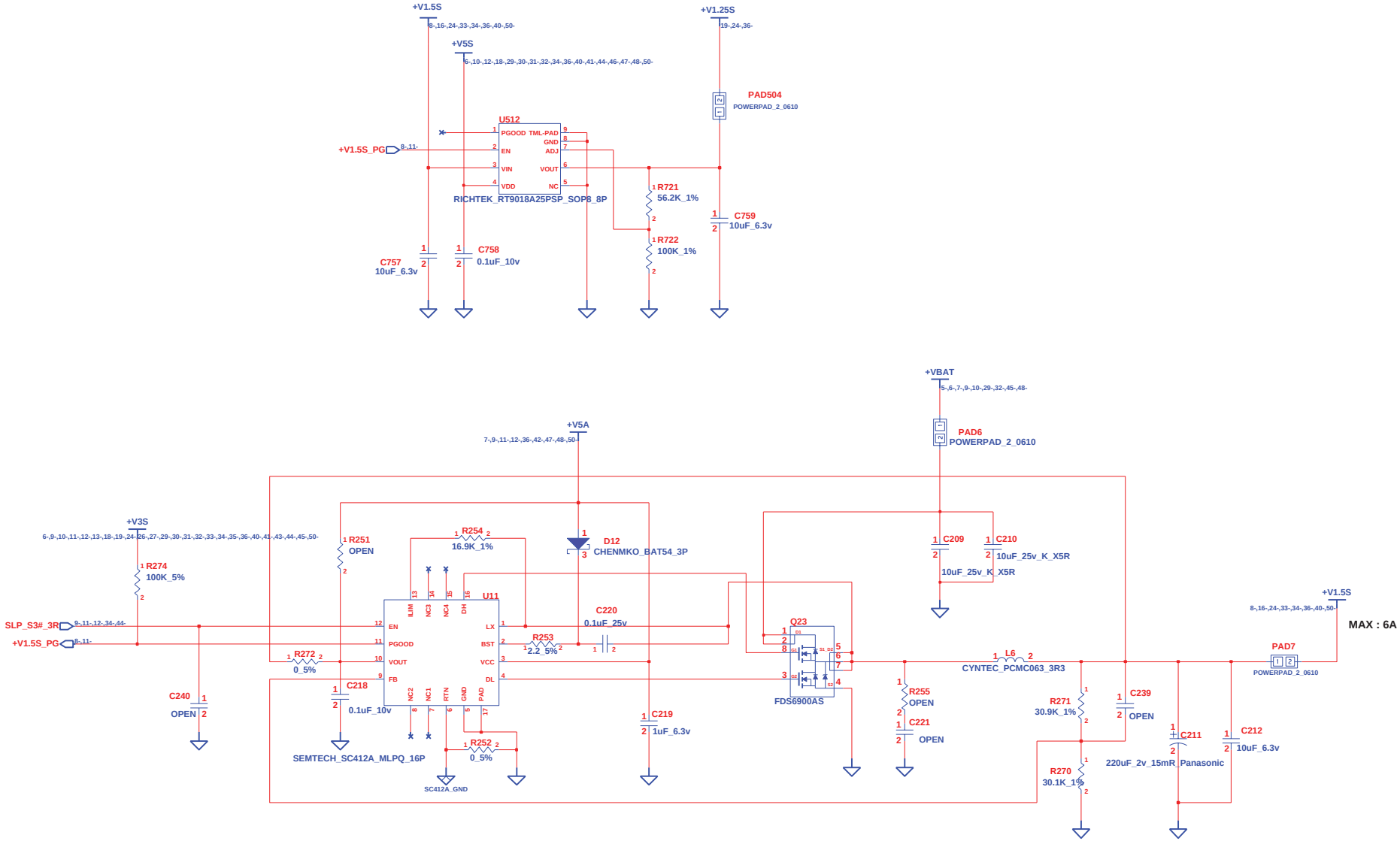

INVENTEC			
TITLE TETON SYSTEM POWER (+V1.8 / +V1.25S)			
SIZE A3	CODE CS	DOC. NUMBER Model_No	REV AX1
CHANGE by RDEE3	10-Dec-2007	SHEET 8 OF 54	

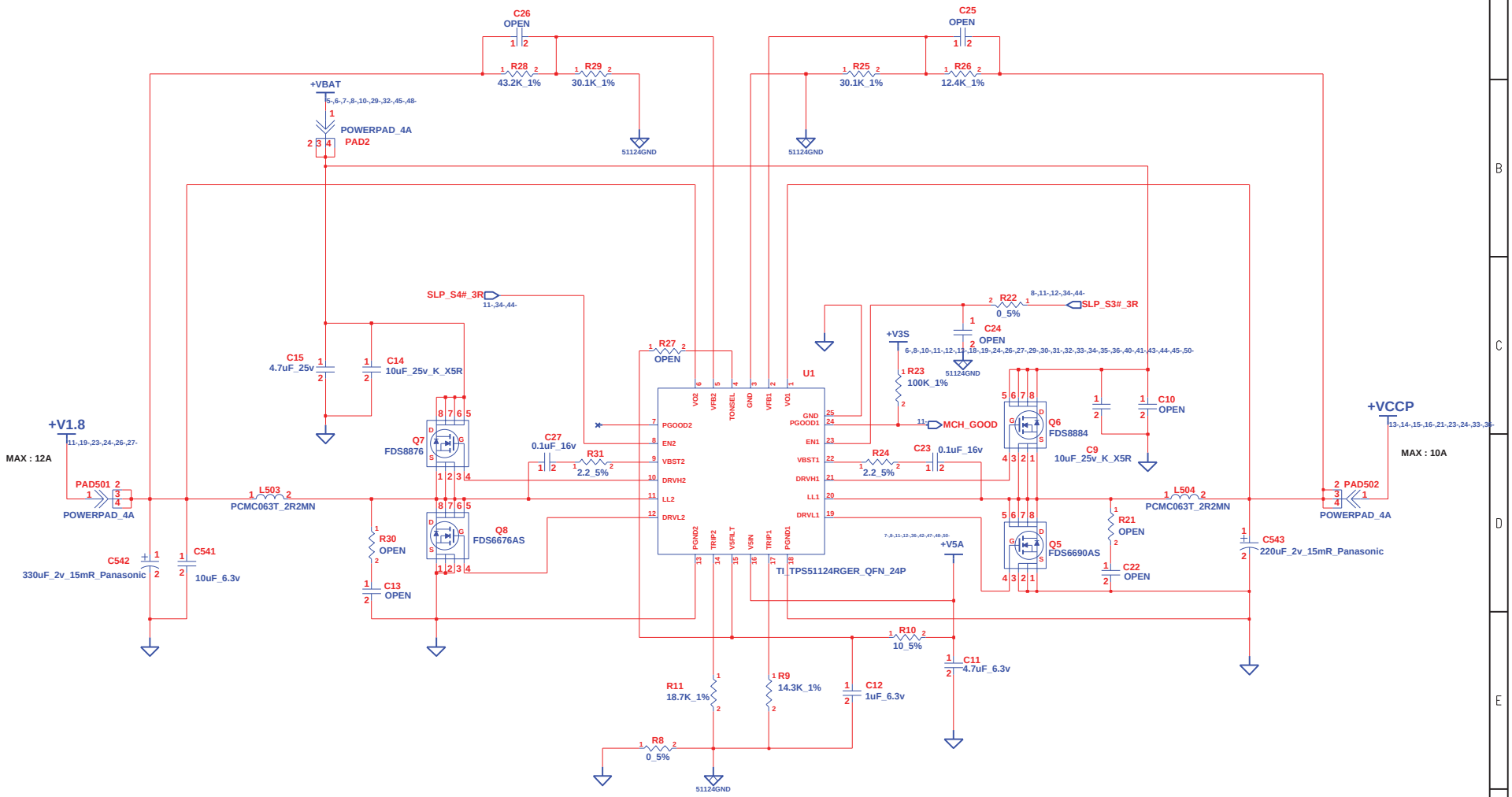

INVENTEC

TITLE **TETON**

SYSTEM POWER(+V1.5S / +VCCP)

SIZE	CODE	DOC. NUMBER	REV
A3	CS	Model_No	AX1

CHANGE by RDEE3 | 10-Dec-2007 | SHEET 9 OF 54

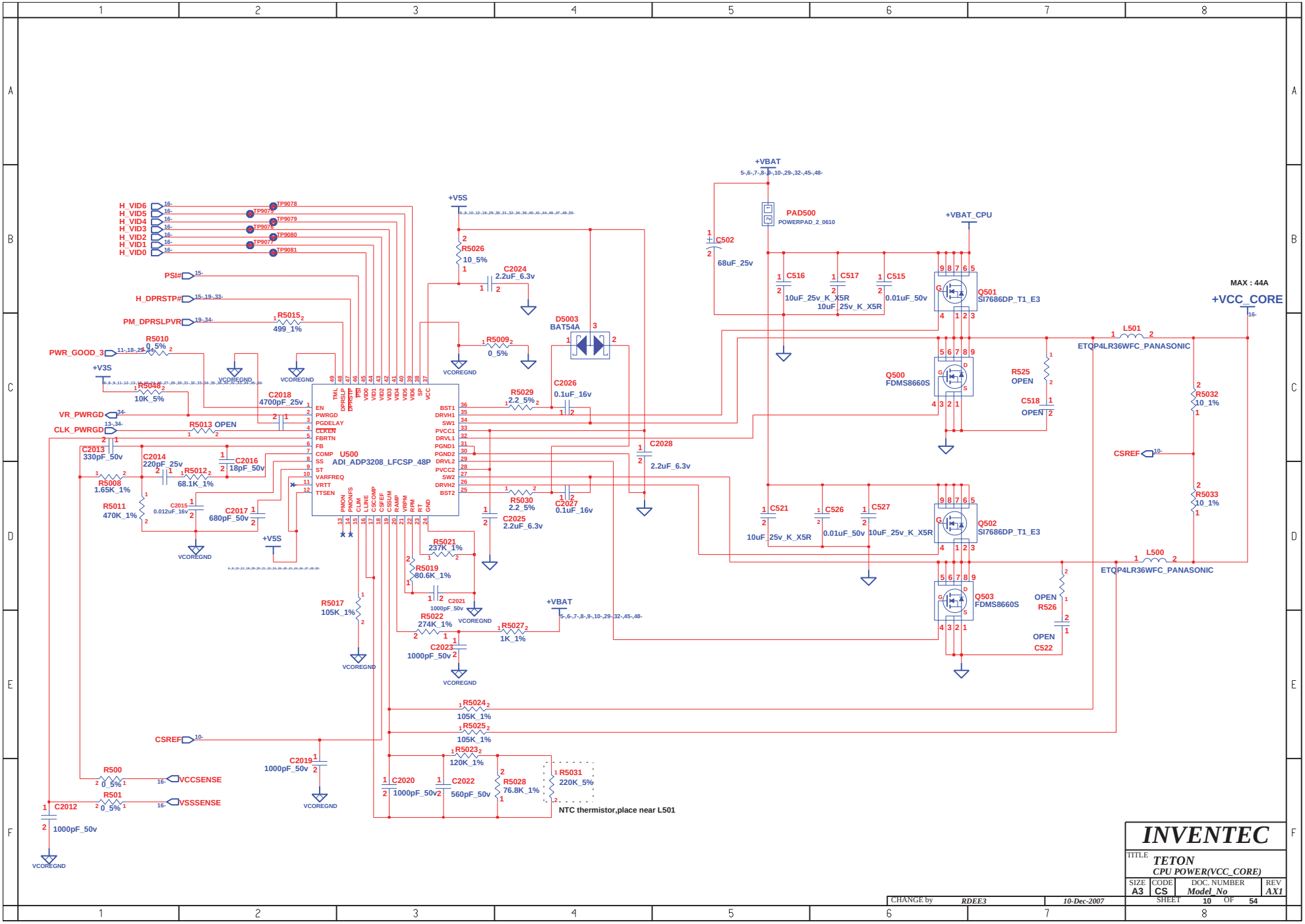

INVENTEC			
TITLE TETON CPU POWER(VCC_CORE)			
SIZE A3	CODE CS	DOC. NUMBER Model_No	REV AX1
CHANGE by RDEE3	10-Dec-2007	SHEET 10 OF 54	

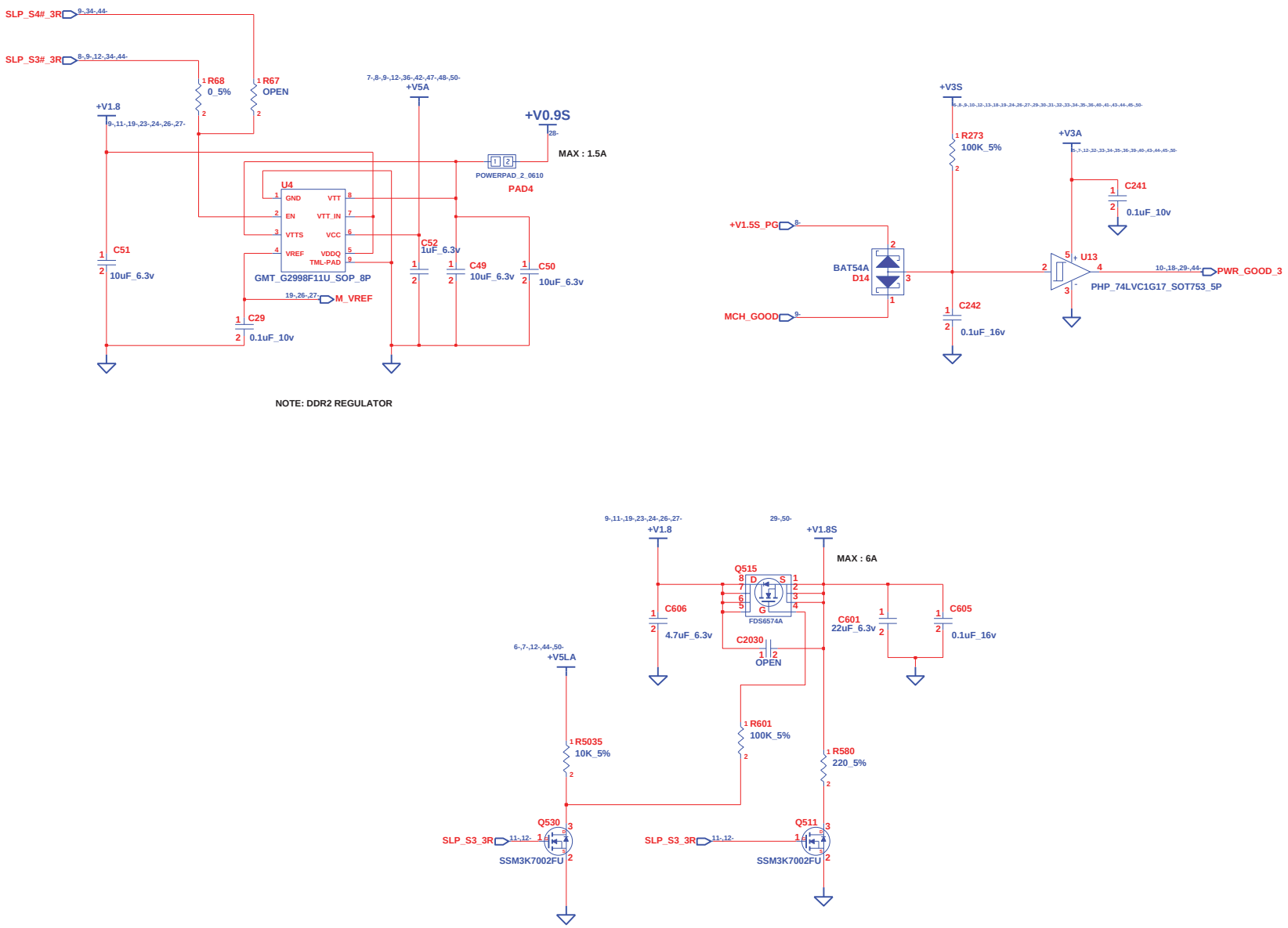

INVENTEC

TITLE **TETON**
+V0.9S / +V1.8S / POWER GOOD

SIZE	CODE	DOC. NUMBER	REV
A3	CS	Model_No	AX1

CHANGE by RDEE3 10-Dec-2007

SHEET 11 OF 54

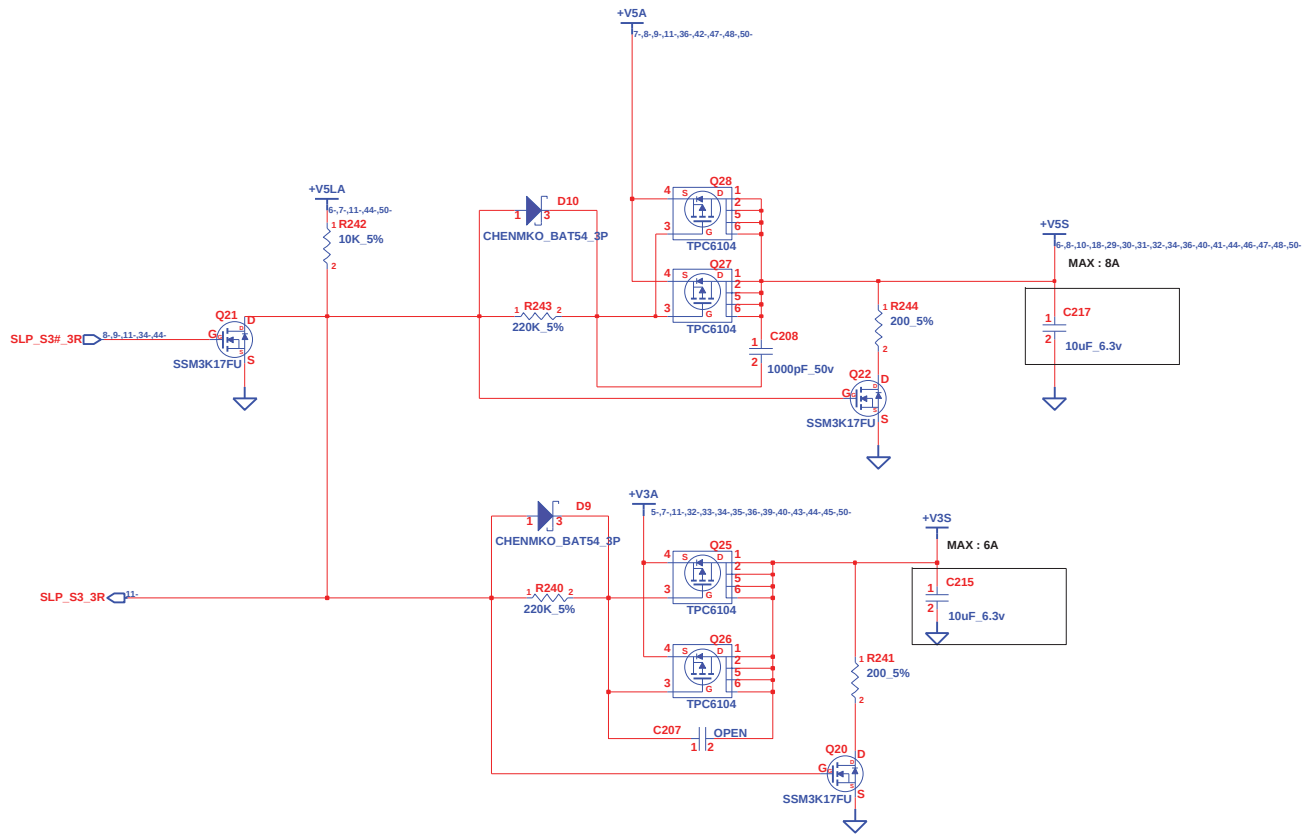

INVENTEC			
TITLE	TETON POWER(+V3S / +V5S)		
SIZE A3	CODE CS	DOC. NUMBER Model_No	REV AX1
CHANGE by RDEE3	10-Dec-2007	SHEET 12 OF 54	

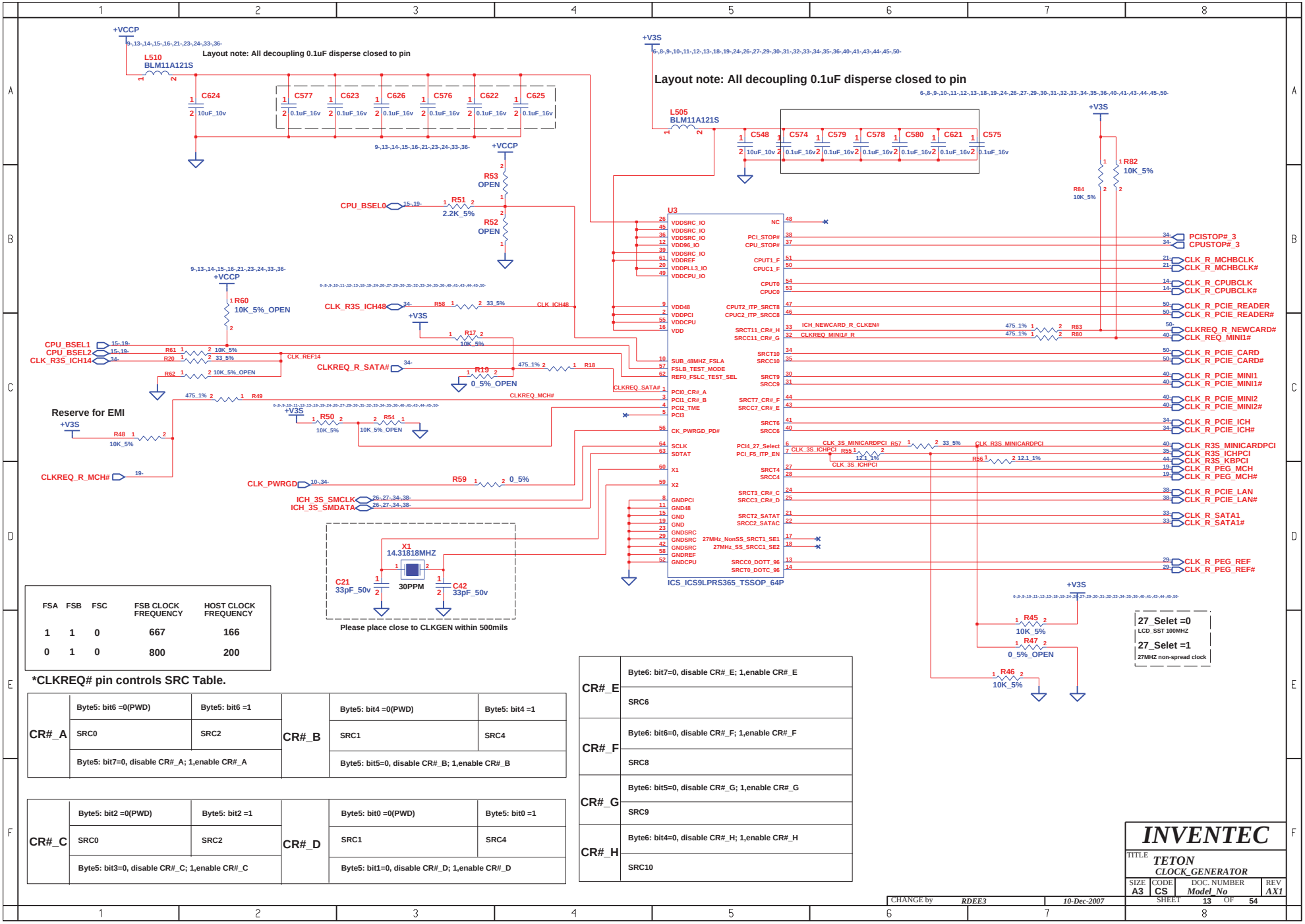

FSA	FSB	FSC	FSB CLOCK FREQUENCY	HOST CLOCK FREQUENCY
1	1	0	667	166
0	1	0	800	200

***CLKREQ# pin controls SRC Table.**

CR#_A	Byte5: bit6 =0(PWD)	Byte5: bit6 =1	CR#_B	Byte5: bit4 =0(PWD)	Byte5: bit4 =1
	SRC0	SRC2		SRC1	SRC4
	Byte5: bit7=0, disable CR#_A; 1,enable CR#_A			Byte5: bit5=0, disable CR#_B; 1,enable CR#_B	

CR#_C	Byte5: bit2 =0(PWD)	Byte5: bit2 =1	CR#_D	Byte5: bit0 =0(PWD)	Byte5: bit0 =1
	SRC0	SRC2		SRC1	SRC4
	Byte5: bit3=0, disable CR#_C; 1,enable CR#_C			Byte5: bit1=0, disable CR#_D; 1,enable CR#_D	

CR#_E	Byte6: bit7=0, disable CR#_E; 1,enable CR#_E
	SRC6
CR#_F	Byte6: bit6=0, disable CR#_F; 1,enable CR#_F
	SRC8
CR#_G	Byte6: bit5=0, disable CR#_G; 1,enable CR#_G
	SRC9
CR#_H	Byte6: bit4=0, disable CR#_H; 1,enable CR#_H
	SRC10

INVENTEC

TITLE TETON CLOCK_GENERATOR

SIZE	CODE	DOC. NUMBER	REV
A3	CS	Model_No	AX1

CHANGE by RDEE3 10-Dec-2007 SHEET 13 OF 54

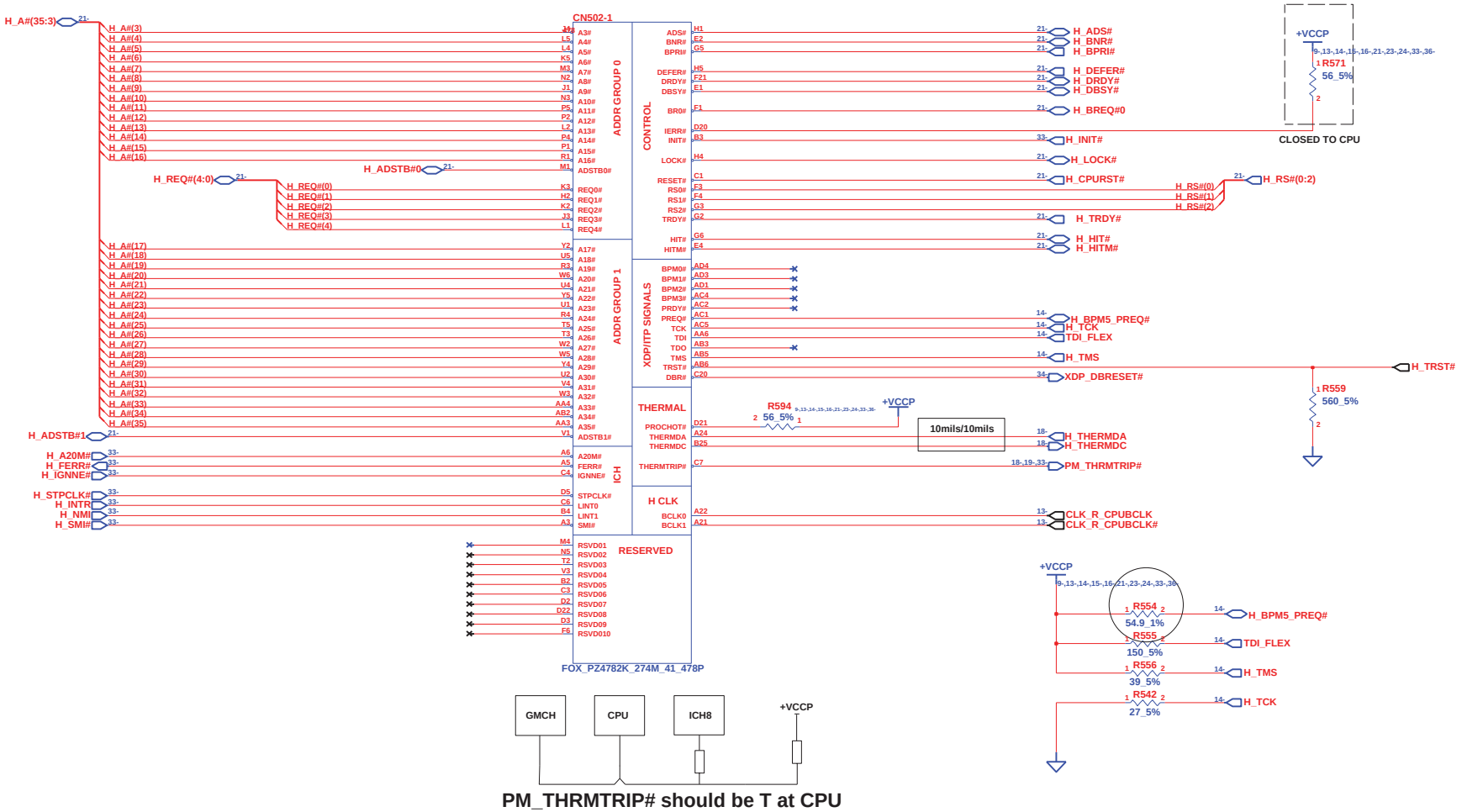

PM_THRMTRIP# should be T at CPU

INVENTEC			
TITLE: TETON Merom-1			
SIZE: A3	CODE: CS	DOC. NUMBER: Model_No	REV: AX1
CHANGE by: RDEE3	10-Dec-2007	SHEET 14 OF 54	

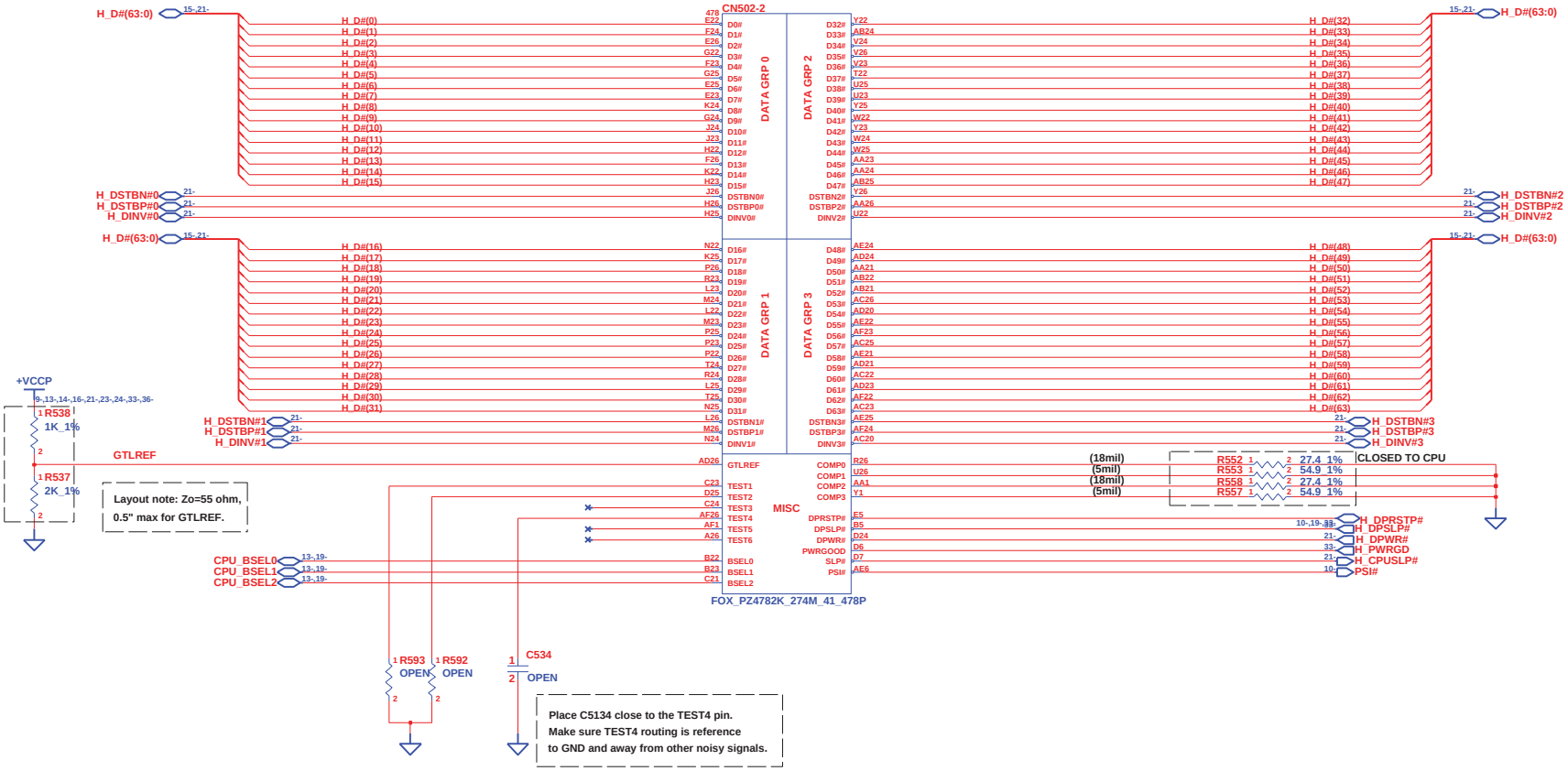

INVENTEC			
TITLE TETON Merom-2			
SIZE A3	CODE CS	DOC. NUMBER Model_No	REV AX1
CHANGE by RDEE3	10-Dec-2007	SHEET 15 OF 54	

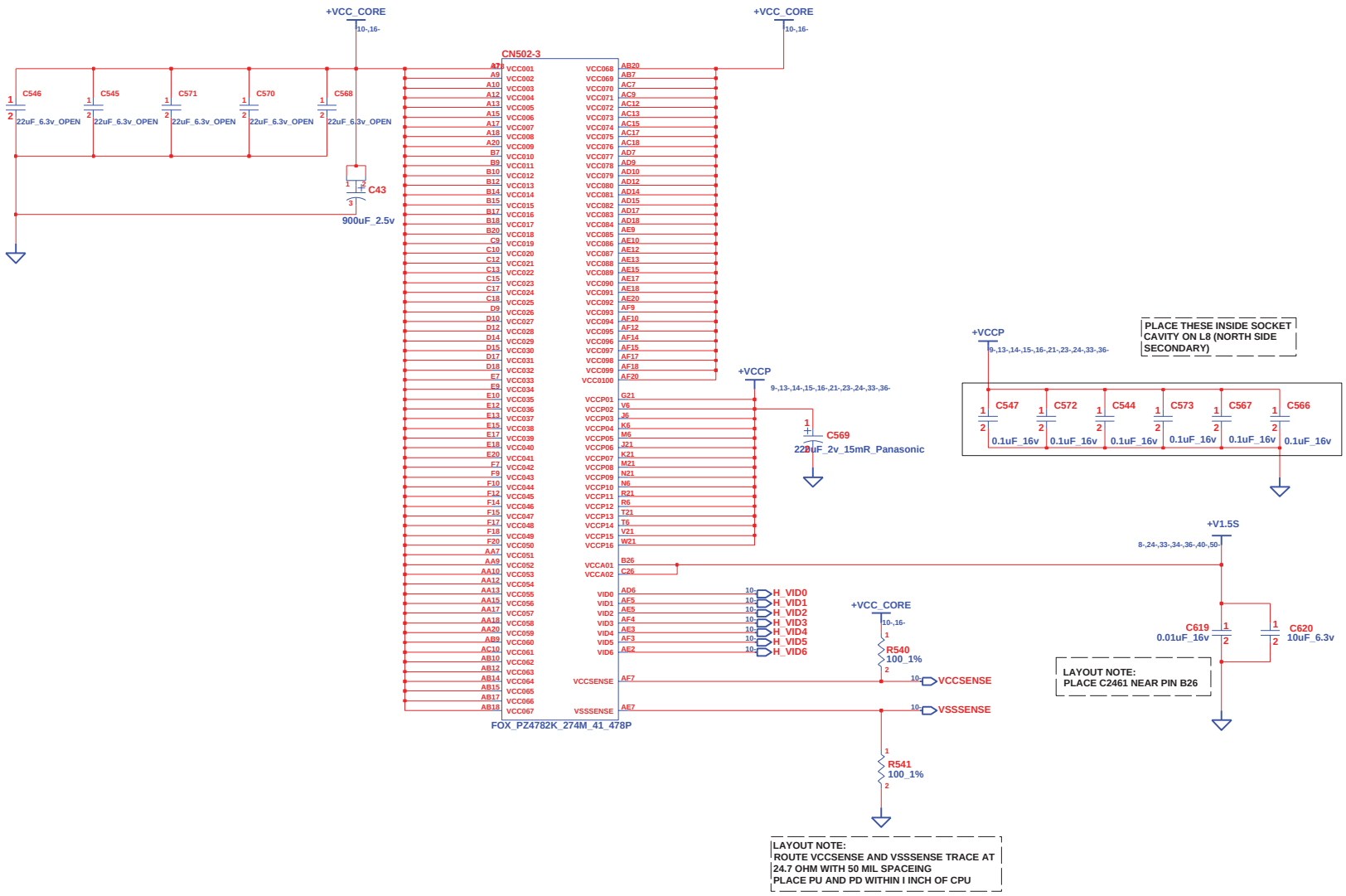

INVENTEC

TITLE TETON
Merom-3

SIZE	CODE	DOC. NUMBER	REV
A3	CS	Model_No	AX1

CHANGE by RDEE3 10-Dec-2007 SHEET 16 OF 54

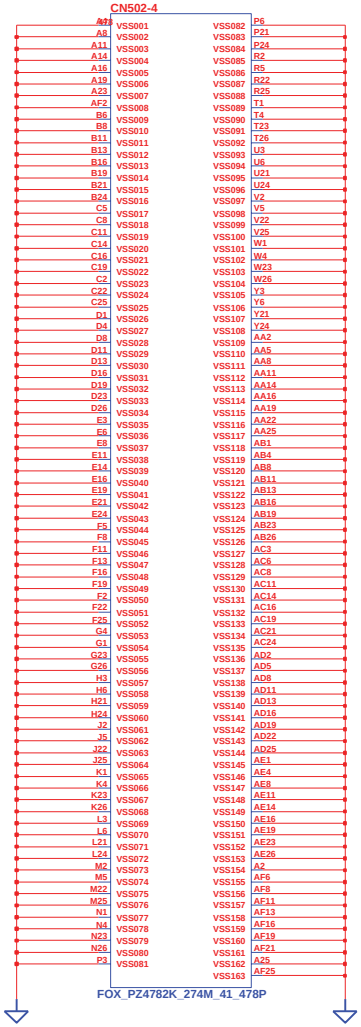

CHANGE by	RDEE3	10-Dec-2007	

INVENTEC

TITLE **TETON**
Merom-4

SIZE	CODE	DOC. NUMBER	REV
A3	CS	Model_No	AX1

SHEET 17 OF 54

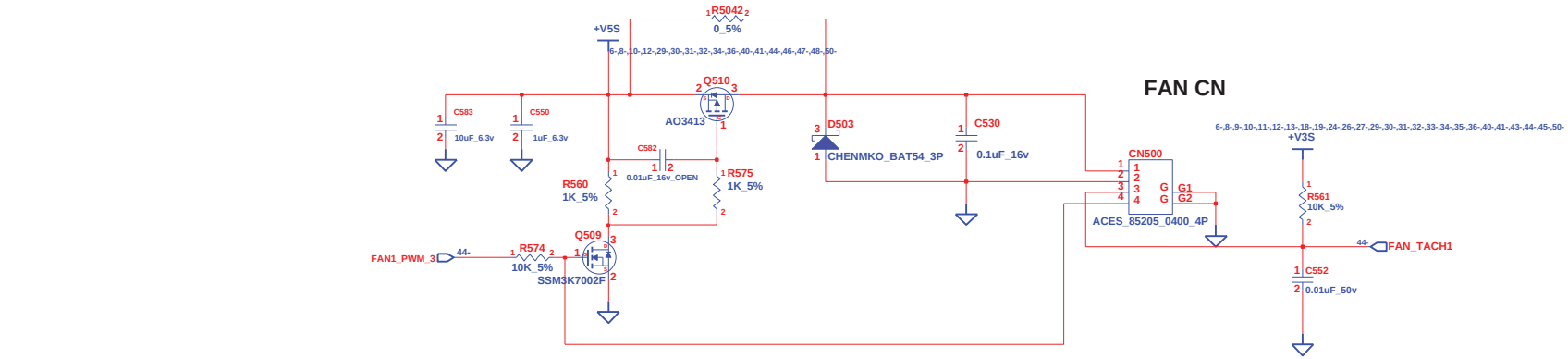

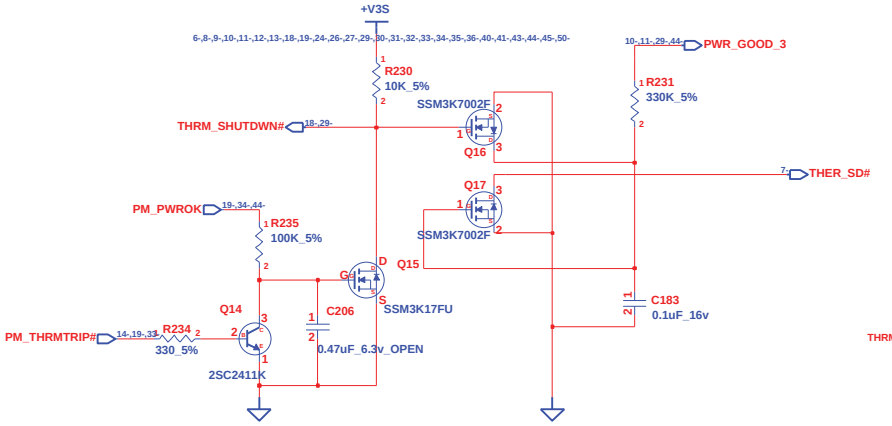

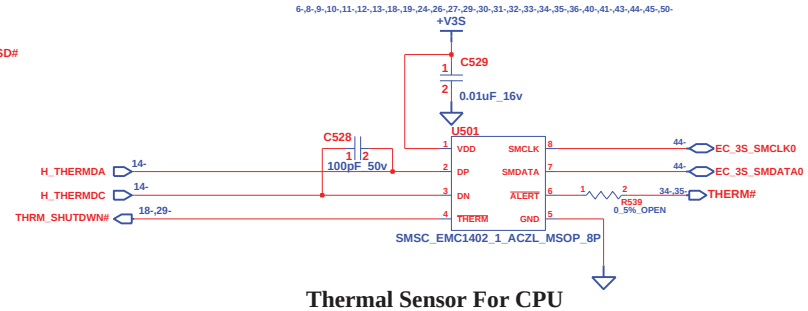

Thermal Sensor For CPU

INVENTEC			
TITLE	TETON THERMAL&FAN CONTROLLER		
SIZE A3	CODE CS	DOC. NUMBER Model_No	REV AX1
CHANGE by RDEE3	10-Dec-2007	SHEET 18 OF 54	

MCH_CFG(5)	LOW=DMIx2 HIGH=DMIx4

MCH_CFG(7) (CPU Strap)	LOW=RSVD HIGH=Mobile CPU

MCH_CFG(9) PCIE Graphics Lane	LOW=Reverse Lane HIGH=Normal operation

MCH_CFG(11) PSB 4X CLK ENABLE	LOW=CALISTOGA HIGH=RESERVED

MCH_CFG(13:12) XOR/ALLZ	00=PARTIAL CLOCK GATING DISABLE 01=XOR MODE ENABLE 10=ALL-Z MODE ENABLE 11=NORMAL OPERATION

MCH_CFG(16) (FSB Dynamic ODT)	LOW=Dynamic ODT Disable HIGH=Dynamic ODT Enable

NOTE: CFG[2:0] STRP : 001b : 533 MT/S
011b : 667 MT/S

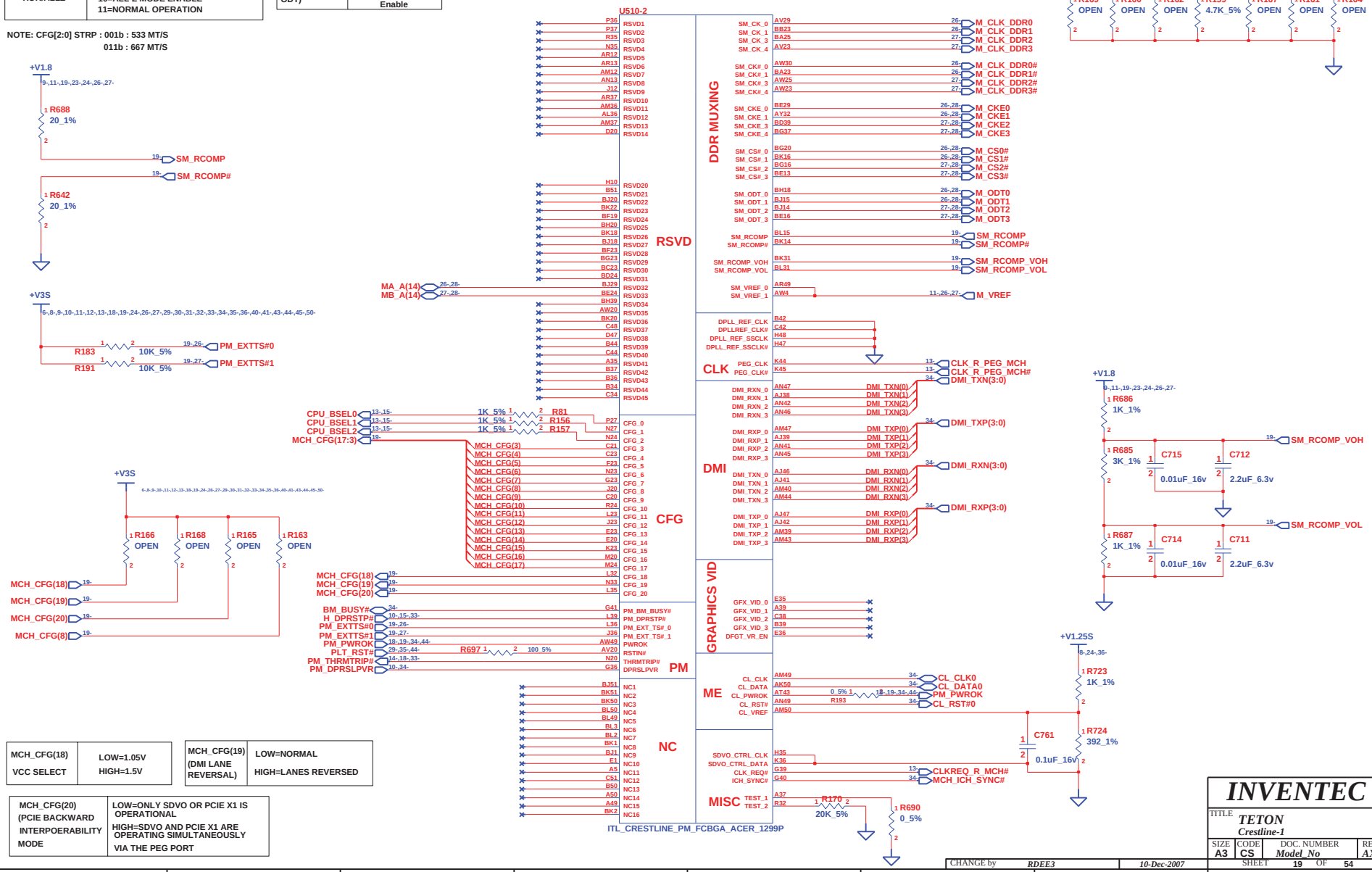

MCH_CFG(18) VCC SELECT	LOW=1.05V HIGH=1.5V

MCH_CFG(19) (DMI LANE REVERSAL)	LOW=NORMAL HIGH=LANES REVERSED

MCH_CFG(20) (PCIE BACKWARD INTERPOERABILITY MODE	LOW=ONLY SDVO OR PCIE X1 IS OPERATIONAL HIGH=SDVO AND PCIE X1 ARE OPERATING SIMULTANEOUSLY VIA THE PEG PORT

TITLE	INVENTEC TETON Crestline-1		
SIZE A3	CODE CS	DOC. NUMBER Model_No	REV AX1
CHANGE by RDEE3	10-Dec-2007	SHEET 19 OF 54	

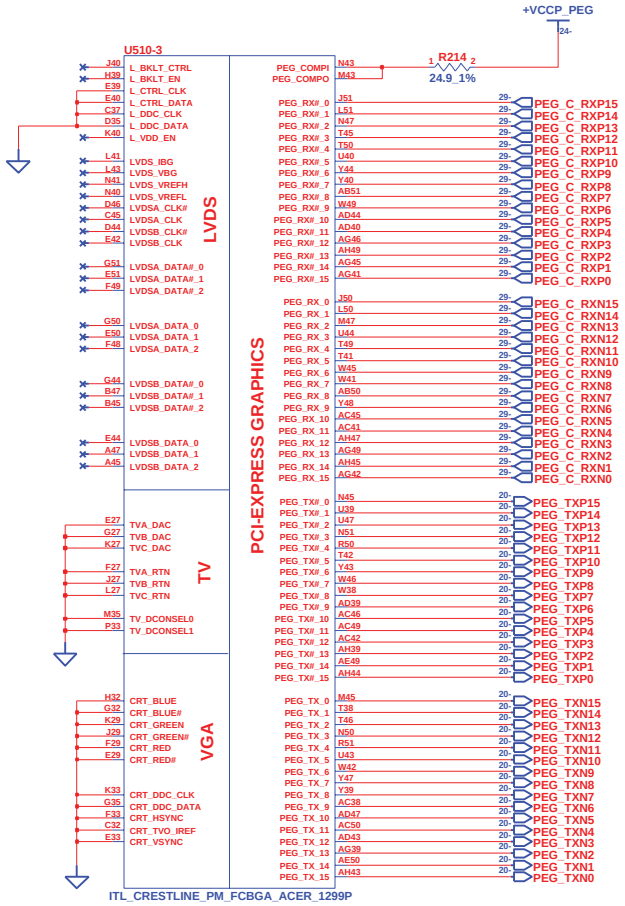

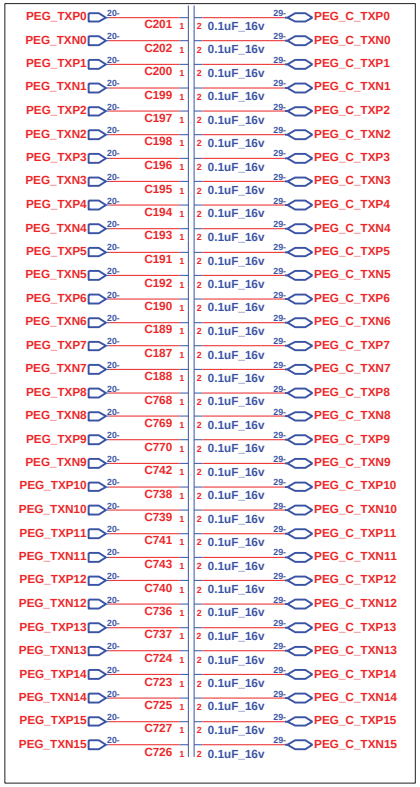

Place to near NB

CHANGE by	RDEE3	10-Dec-2007	

INVENTEC

TITLE *TETON*
Crestline-2

SIZE	CODE	DOC. NUMBER	REV
A3	CS	Model_No	AX1

SHEET 20 OF 54

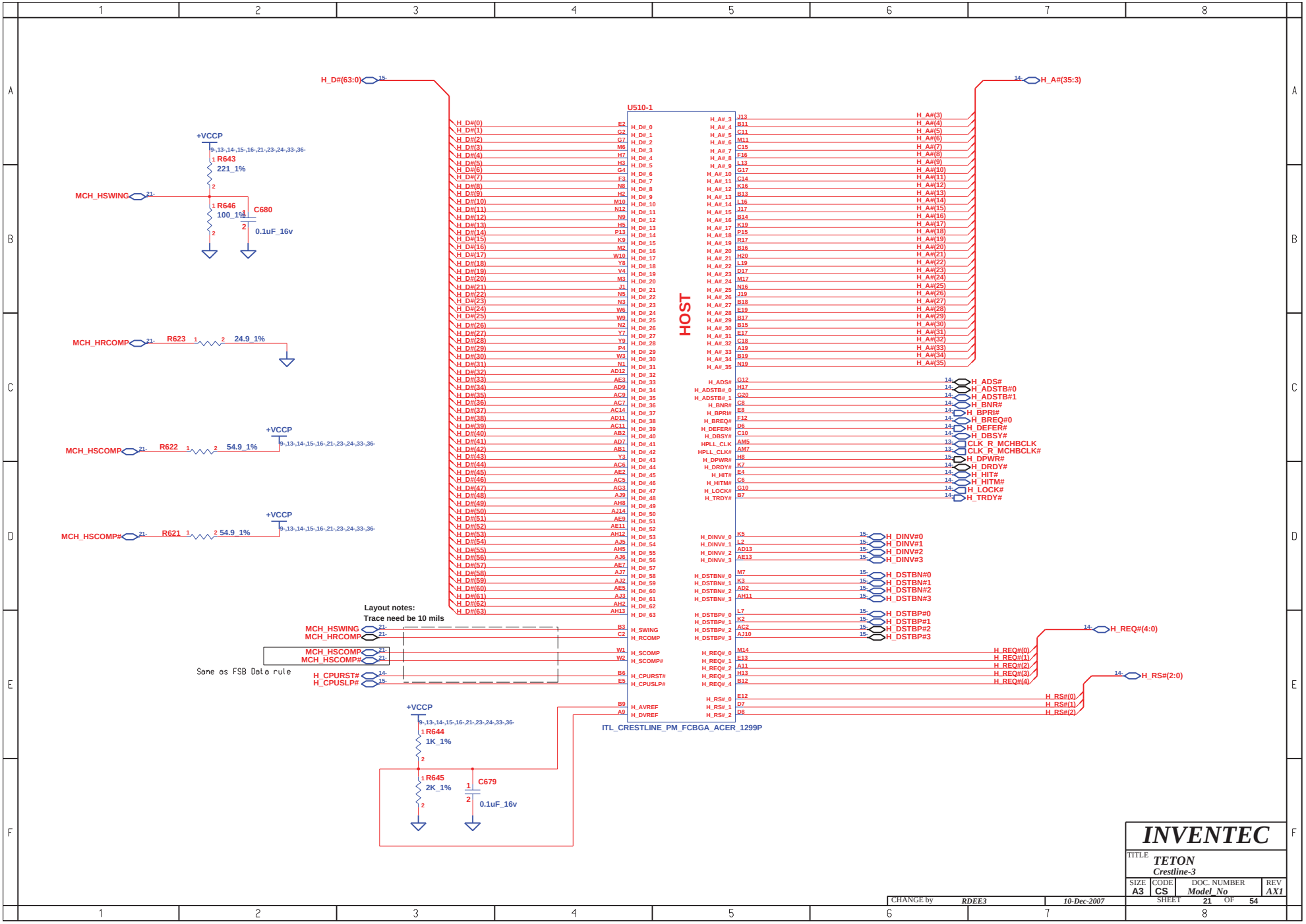

INVENTEC

TITLE TETON
Crestline-3

SIZE	CODE	DOC. NUMBER	REV
A3	CS	Model_No	AX1

CHANGE by RDEE3 10-Dec-2007 SHEET 21 OF 54

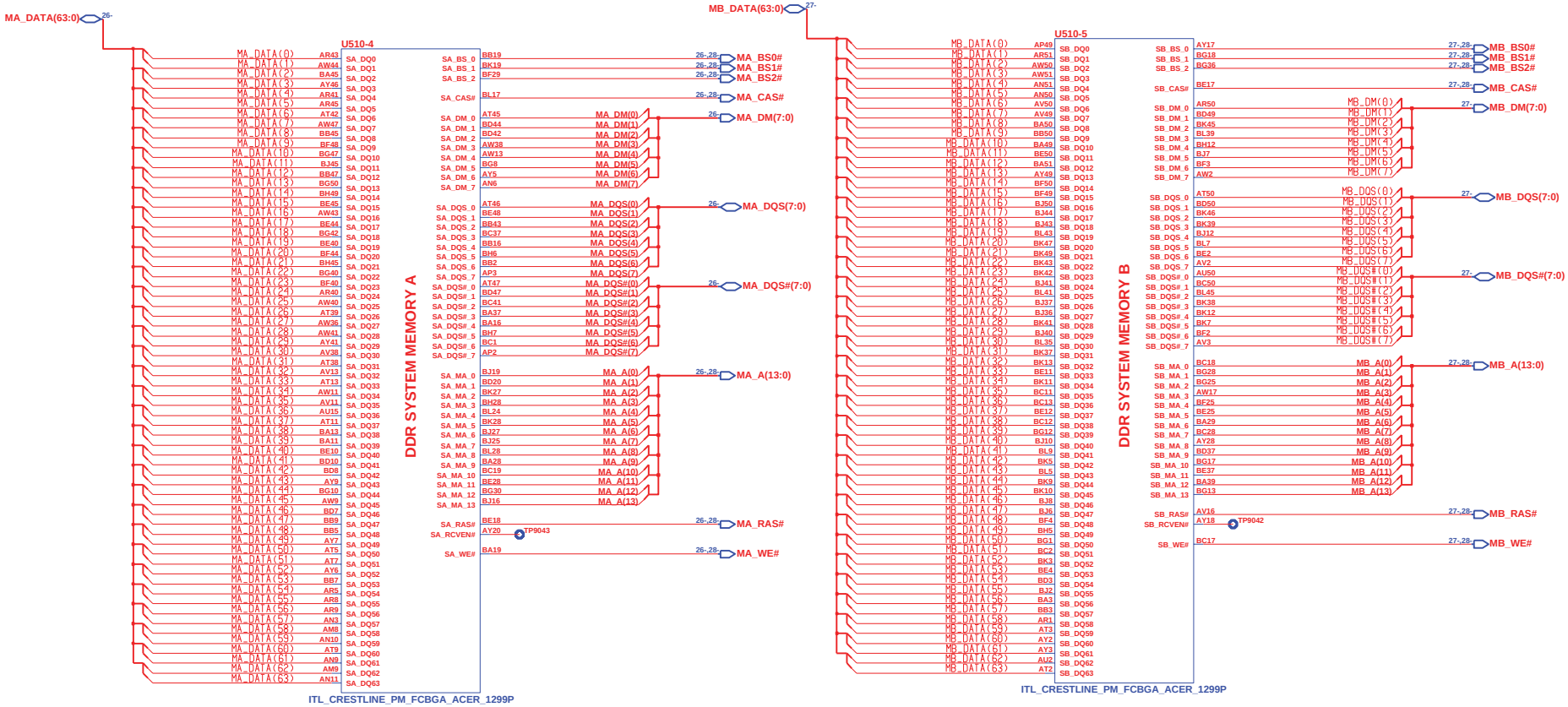

INVENTEC

TITLE **TETON**
Crestline-4

SIZE	CODE	DOC. NUMBER	REV
A3	CS	Model_No	AX1

CHANGE by RDEE3 | 10-Dec-2007 | SHEET 22 OF 54

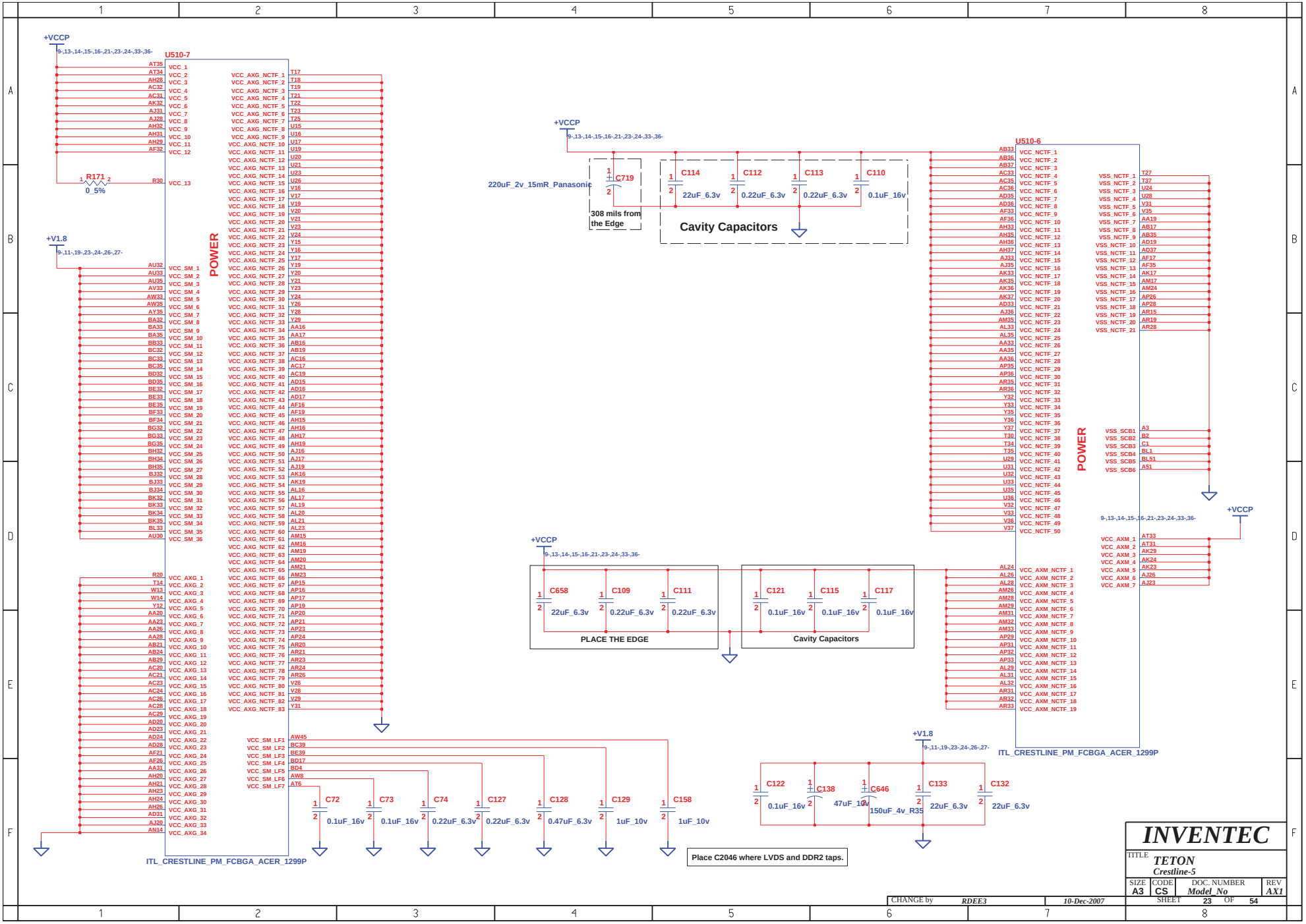
+VCCP
9,-13,-14,-15,-16,-21,-23,-24,-33,-36-
U510-7
R171
0_5%
+V1.8
9,-11,-19,-23,-24,-26,-27-
POWER
ITL_CRESTLINE_PM_FCBGA_ACER_1299P
C719
220uF_2v_15mR_Panasonic
308 mils from the Edge
C114
22uF_6.3v
C112
0.22uF_6.3v
C113
0.22uF_6.3v
C110
0.1uF_16v
Cavity Capacitors
U510-6
C658
22uF_6.3v
C109
0.22uF_6.3v
C111
0.22uF_6.3v
PLACE THE EDGE
C121
0.1uF_16v
C115
0.1uF_16v
C117
0.1uF_16v
Cavity Capacitors
C72
0.1uF_16v
C73
0.1uF_16v
C74
0.22uF_6.3v
C127
0.22uF_6.3v
C128
0.47uF_6.3v
C129
1uF_10v
C158
1uF_10v
C122
0.1uF_16v
C138
47uF_10v
C646
150uF_4v_R35
C133
22uF_6.3v
C132
22uF_6.3v
Place C2046 where LVDS and DDR2 taps.
INVENTEC
TITLE
TETON
Crestline-5
SIZE A3
CODE CS
DOC. NUMBER Model_No
REV AX1
CHANGE by RDEE3
10-Dec-2007
SHEET 23 OF 54

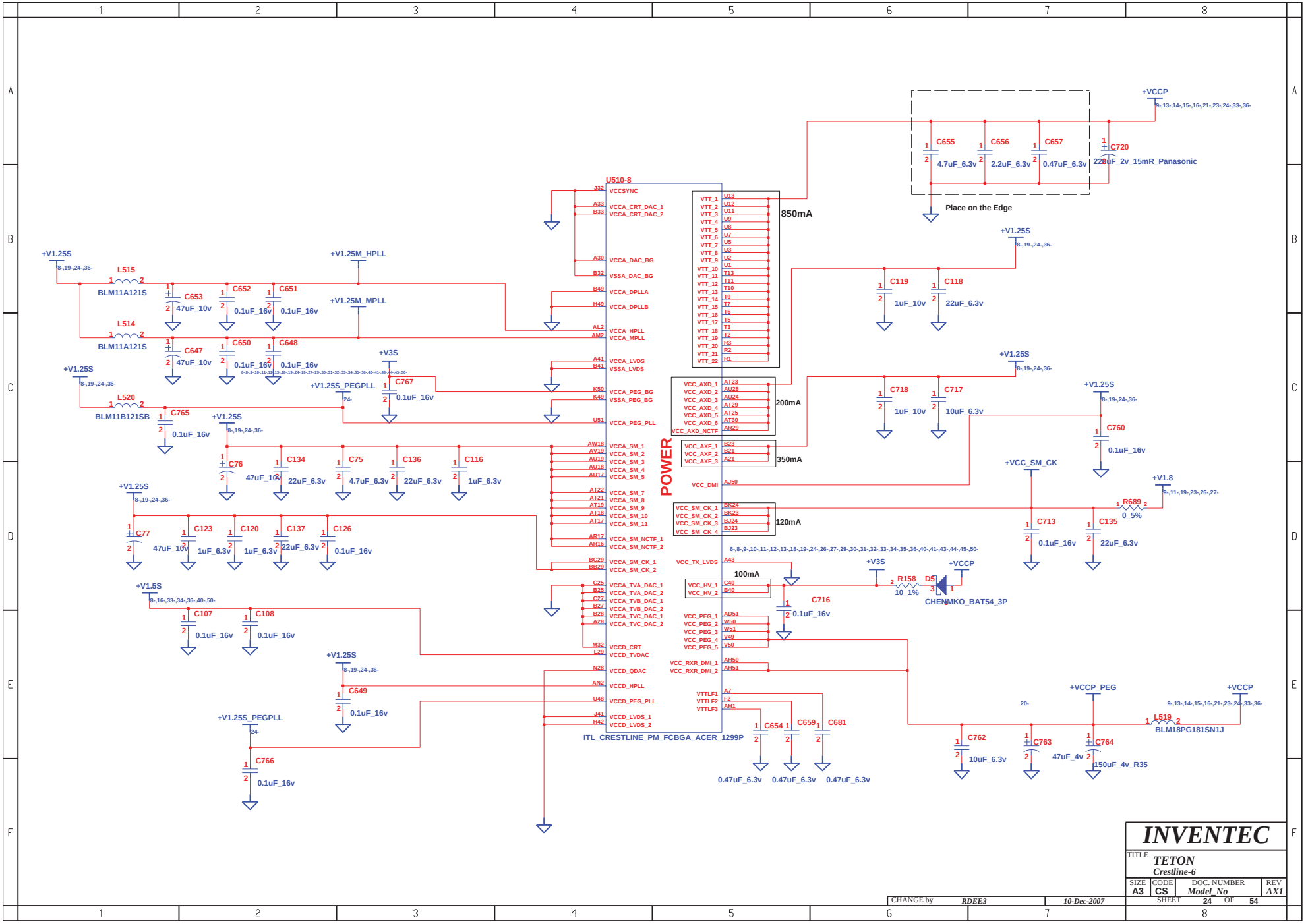
U510-8
POWER
ITL_CRESTLINE_PM_FCBGA_ACER_1299P
850mA
200mA
350mA
120mA
100mA
Place on the Edge
+VCCP
+V1.25S
+V1.25M_HPLL
+V1.25M_MPLL
+V3S
+V1.25S_PEGPLL
+VCC_SM_CK
+V1.8
+V1.5S
+VCCP_PEG
L515
BLM11A121S
L514
BLM11A121S
L520
BLM11B121SB
C653
47uF_10v
C652
0.1uF_16v
C651
0.1uF_16v
C647
47uF_10v
C650
0.1uF_16v
C648
0.1uF_16v
C767
0.1uF_16v
C765
0.1uF_16v
C76
47uF_10v
C134
22uF_6.3v
C75
4.7uF_6.3v
C136
22uF_6.3v
C116
1uF_6.3v
C77
47uF_10v
C123
1uF_6.3v
C120
1uF_6.3v
C137
22uF_6.3v
C126
0.1uF_16v
C107
0.1uF_16v
C108
0.1uF_16v
C649
0.1uF_16v
C766
0.1uF_16v
C655
4.7uF_6.3v
C656
2.2uF_6.3v
C657
0.47uF_6.3v
C720
220uF_2v_15mR_Panasonic
C119
1uF_10v
C118
22uF_6.3v
C718
1uF_10v
C717
10uF_6.3v
C760
0.1uF_16v
C713
0.1uF_16v
C135
22uF_6.3v
R689
0_5%
R158
10_1%
D5
CHENMKO_BAT54_3P
C716
0.1uF_16v
C654
0.47uF_6.3v
C659
0.47uF_6.3v
C681
0.47uF_6.3v
C762
10uF_6.3v
C763
47uF_4v
C764
150uF_4v_R35
L519
BLM18PG181SN1J
INVENTEC
TITLE
TETON
Crestline-6
SIZE A3
CODE CS
DOC. NUMBER Model_No
REV AX1
SHEET 24 OF 54
CHANGE by RDEE3
10-Dec-2007

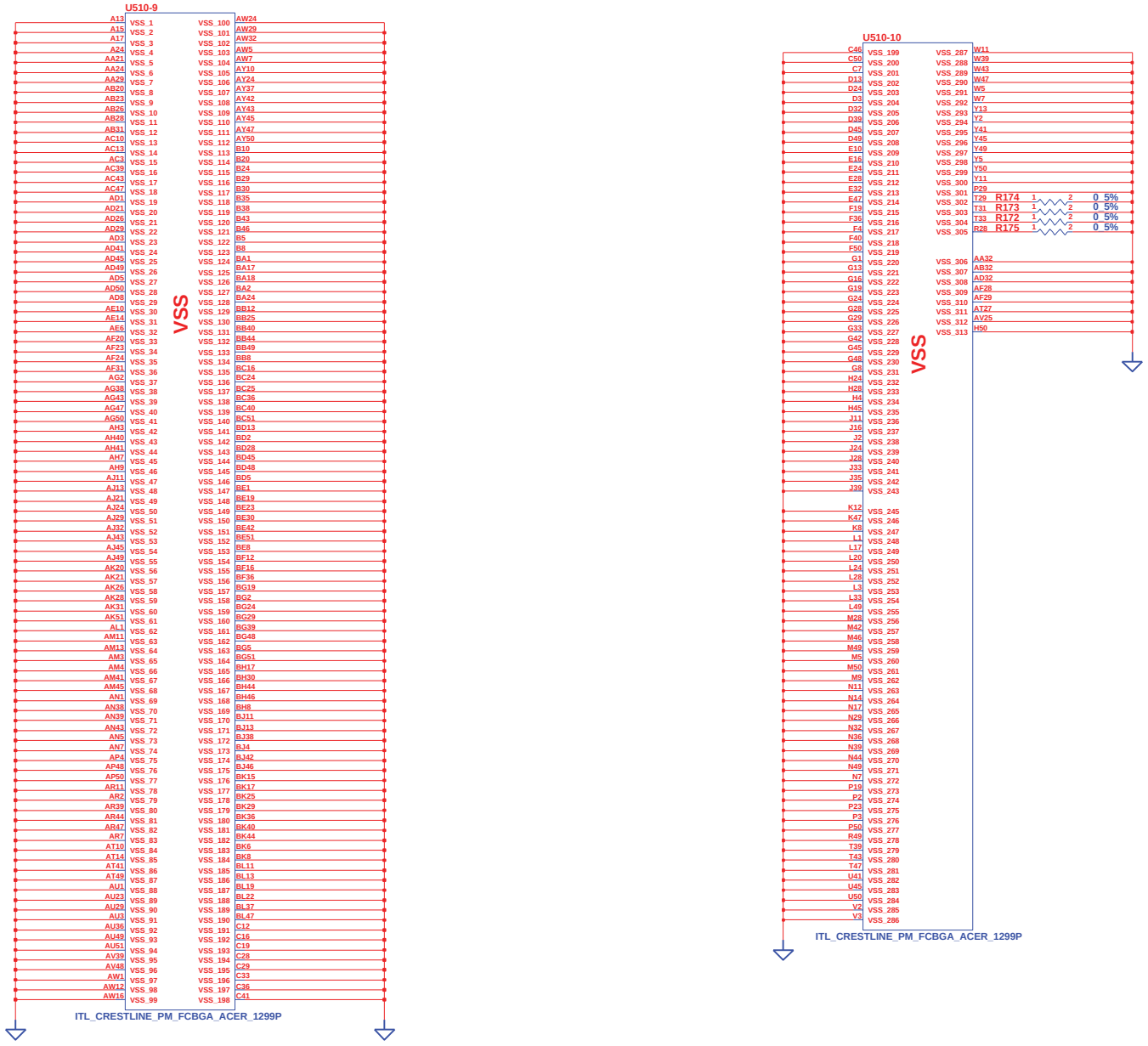

INVENTEC			
TITLE TETON Crestline-7			
SIZE A3	CODE CS	DOC. NUMBER Model_No	REV AX1
CHANGE by RDEE3	10-Dec-2007	SHEET 25 OF 54	

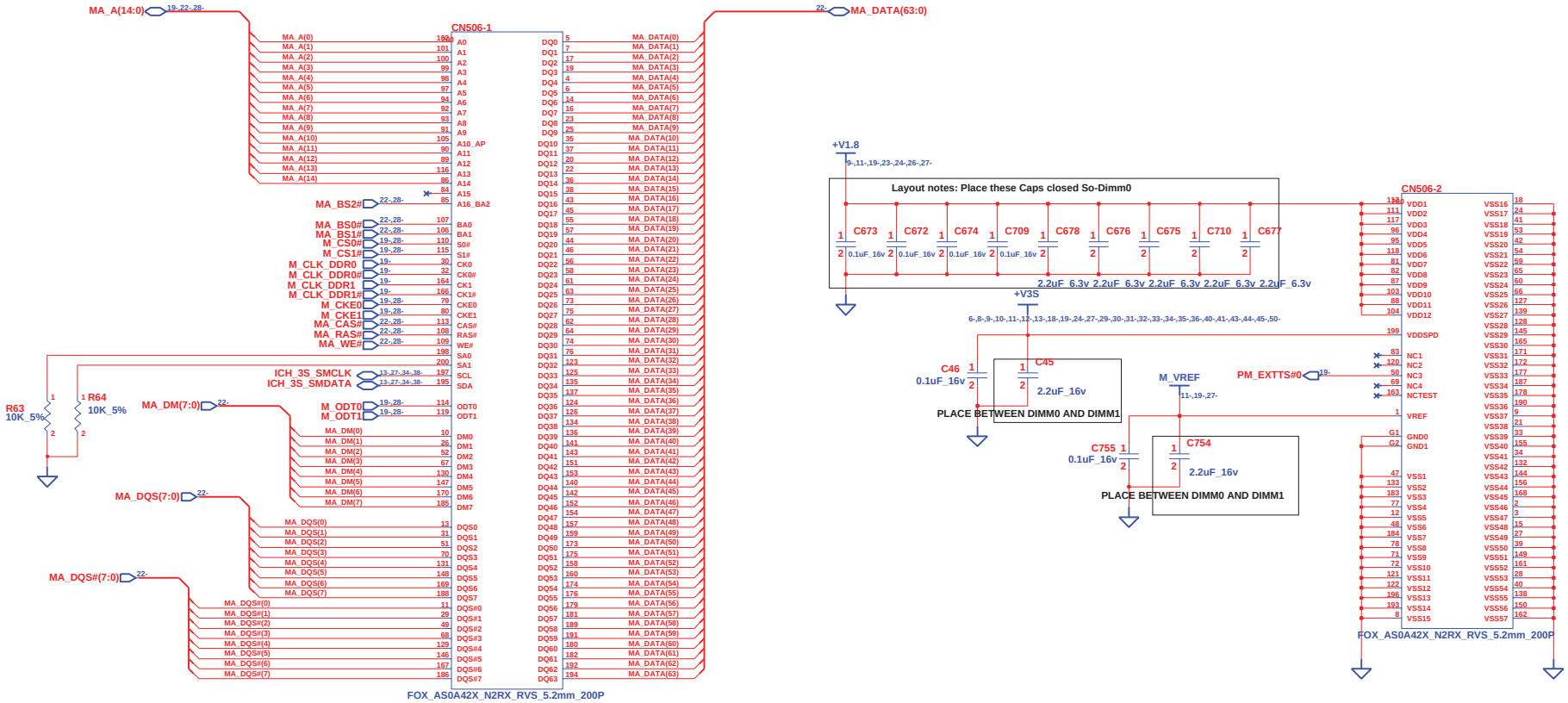

DDR2 SODIMM0

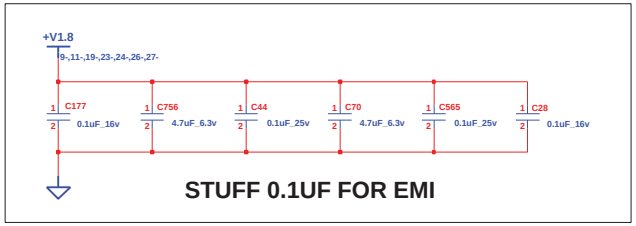

INVENTEC			
TITLE: TETON DDR2-DIMM-0			
SIZE: A3	CODE: CS	DOC. NUMBER: Model_No	REV: AX1
CHANGE by: RDEE3	11-Feb-2008	SHEET 26 OF 54	

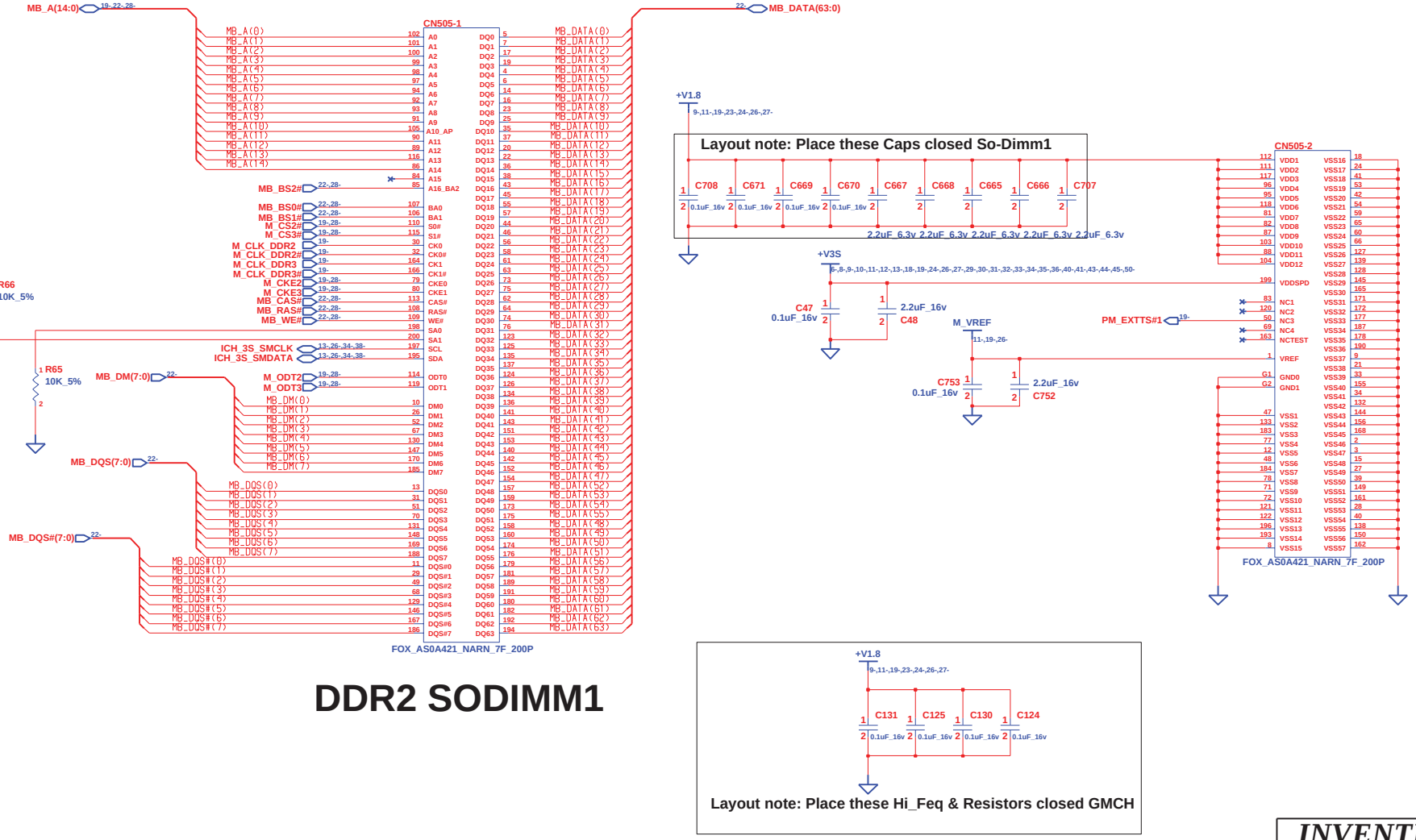

DDR2 SODIMM1

INVENTEC			
TITLE	TETON DDR2-DIMM-1		
SIZE A3	CODE CS	DOC. NUMBER Model_No	REV AX1
CHANGE by RDEE3	10-Dec-2007	SHEET 27 OF 54	

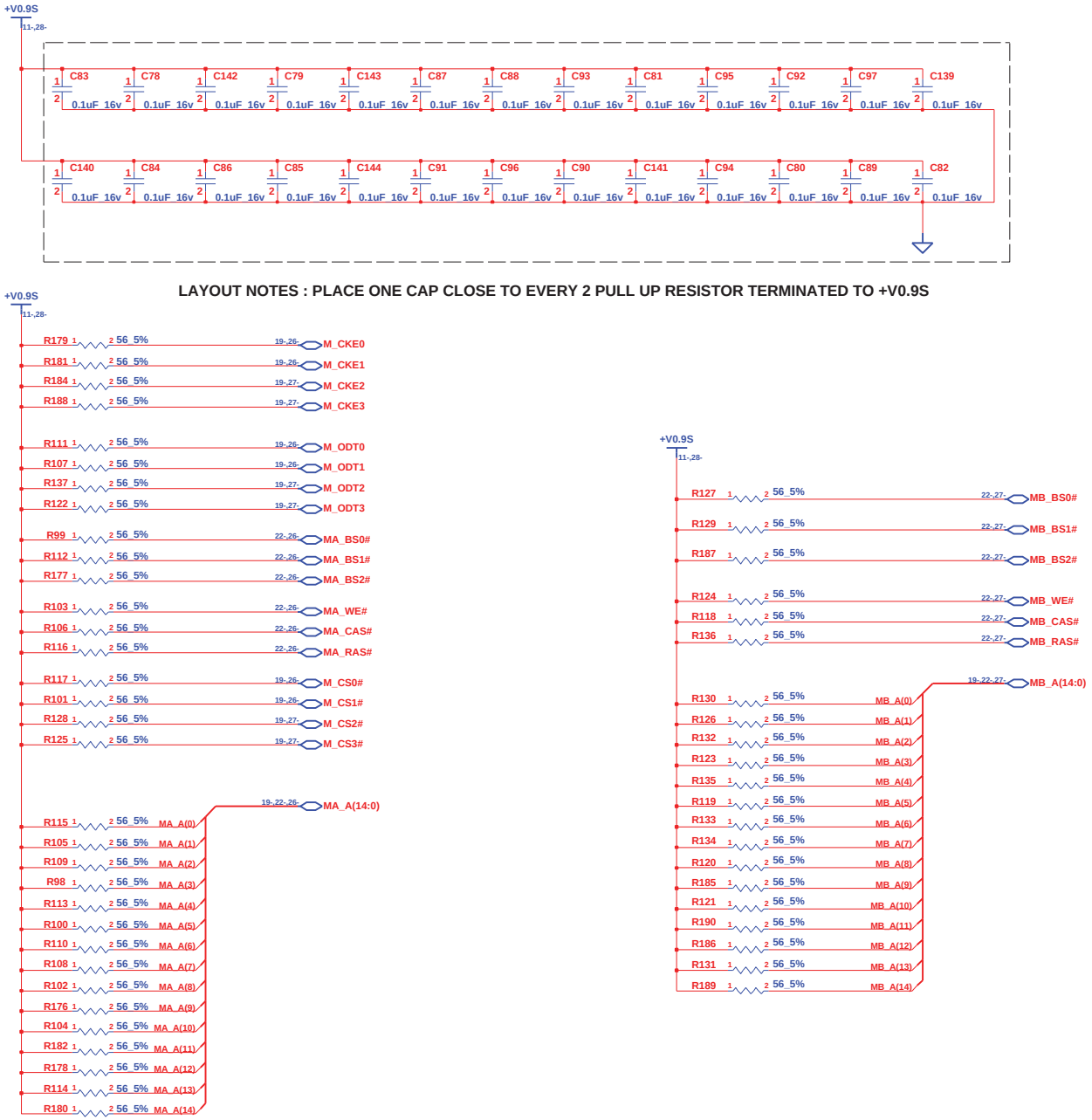

CHANGE by	RDEE3	10-Dec-2007	

INVENTEC

TITLE: TETON
DDR2-DAMPING

SIZE	CODE	DOC. NUMBER	REV
A3	CS	Model_No	AX1

SHEET 28 OF 54

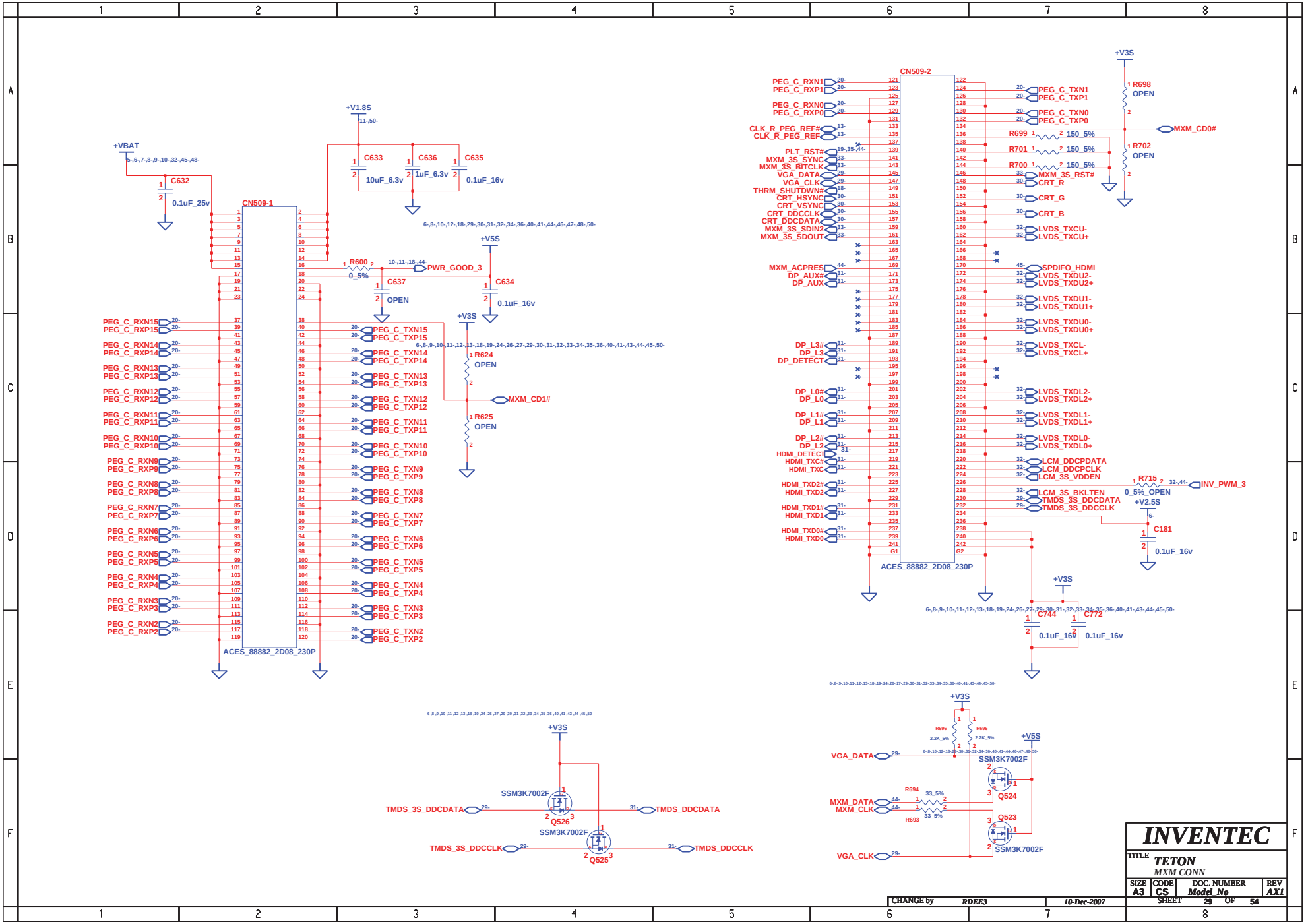
CN509-1
ACES_88882_2D08_230P
CN509-2
ACES_88882_2D08_230P
+VBAT
C632
0.1uF_25v
+V1.8S
C633
10uF_6.3v
C636
1uF_6.3v
C635
0.1uF_16v
+V5S
R600
0_5%
PWR_GOOD_3
C637
OPEN
C634
0.1uF_16v
+V3S
R624
OPEN
R625
OPEN
MXM_CD1#
R698
OPEN
R702
OPEN
MXM_CD0#
R699
150_5%
R701
150_5%
R700
150_5%
MXM_3S_RST#
CRT_R
CRT_G
CRT_B
LVDS_TXCU-
LVDS_TXCU+
SPDIFO_HDMI
LVDS_TXDU2-
LVDS_TXDU2+
LVDS_TXDU1-
LVDS_TXDU1+
LVDS_TXDU0-
LVDS_TXDU0+
LVDS_TXCL-
LVDS_TXCL+
LVDS_TXDL2-
LVDS_TXDL2+
LVDS_TXDL1-
LVDS_TXDL1+
LVDS_TXDL0-
LVDS_TXDL0+
LCM_DDCPDATA
LCM_DDCPCLK
LCM_3S_VDDEN
LCM_3S_BKLTEN
TMDS_3S_DDCDATA
TMDS_3S_DDCCLK
R715
0_5%_OPEN
INV_PWM_3
+V2.5S
C181
0.1uF_16v
C744
0.1uF_16v
C772
0.1uF_16v
SSM3K7002F
Q526
Q525
TMDS_3S_DDCDATA
TMDS_DDCDATA
TMDS_3S_DDCCLK
TMDS_DDCCLK
R696
2.2K_5%
R695
2.2K_5%
VGA_DATA
Q524
R694
33_5%
R693
33_5%
MXM_DATA
MXM_CLK
Q523
VGA_CLK
INVENTEC
TITLE
TETON
MXM CONN
SIZE A3
CODE CS
DOC. NUMBER Model_No
REV AX1
SHEET 29 OF 54
CHANGE by RDEE3
10-Dec-2007

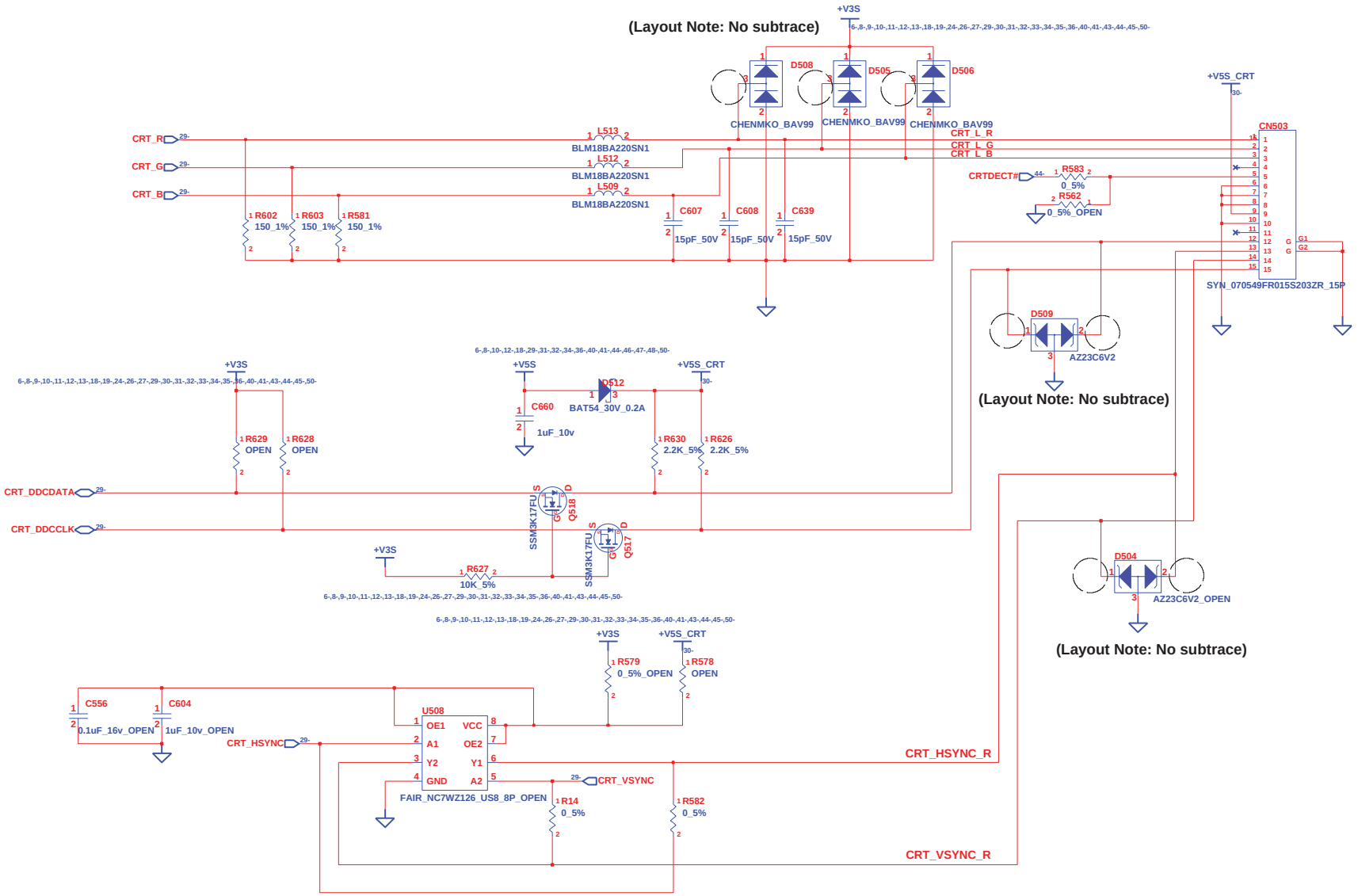

INVENTEC			
TITLE TETON CRT INTERFACE			
SIZE A3	CODE CS	DOC. NUMBER Model_No	REV AX1
CHANGE by RDEE3	11-Feb-2008	SHEET 30 OF 54	

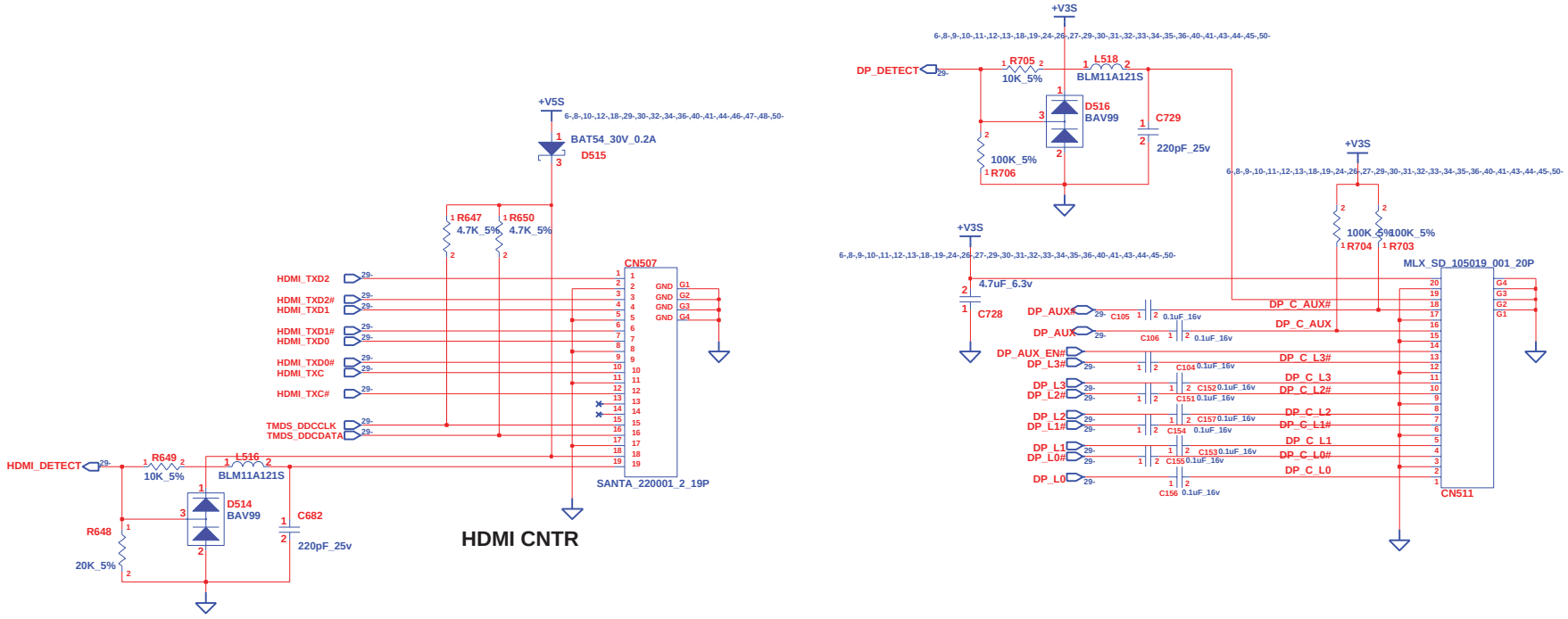

INVENTEC			
TITLE TETON HDMI			
SIZE A3	CODE CS	DOC. NUMBER Model_No	REV AX1
CHANGE by RDEE3	10-Dec-2007	SHEET 31 OF 54	

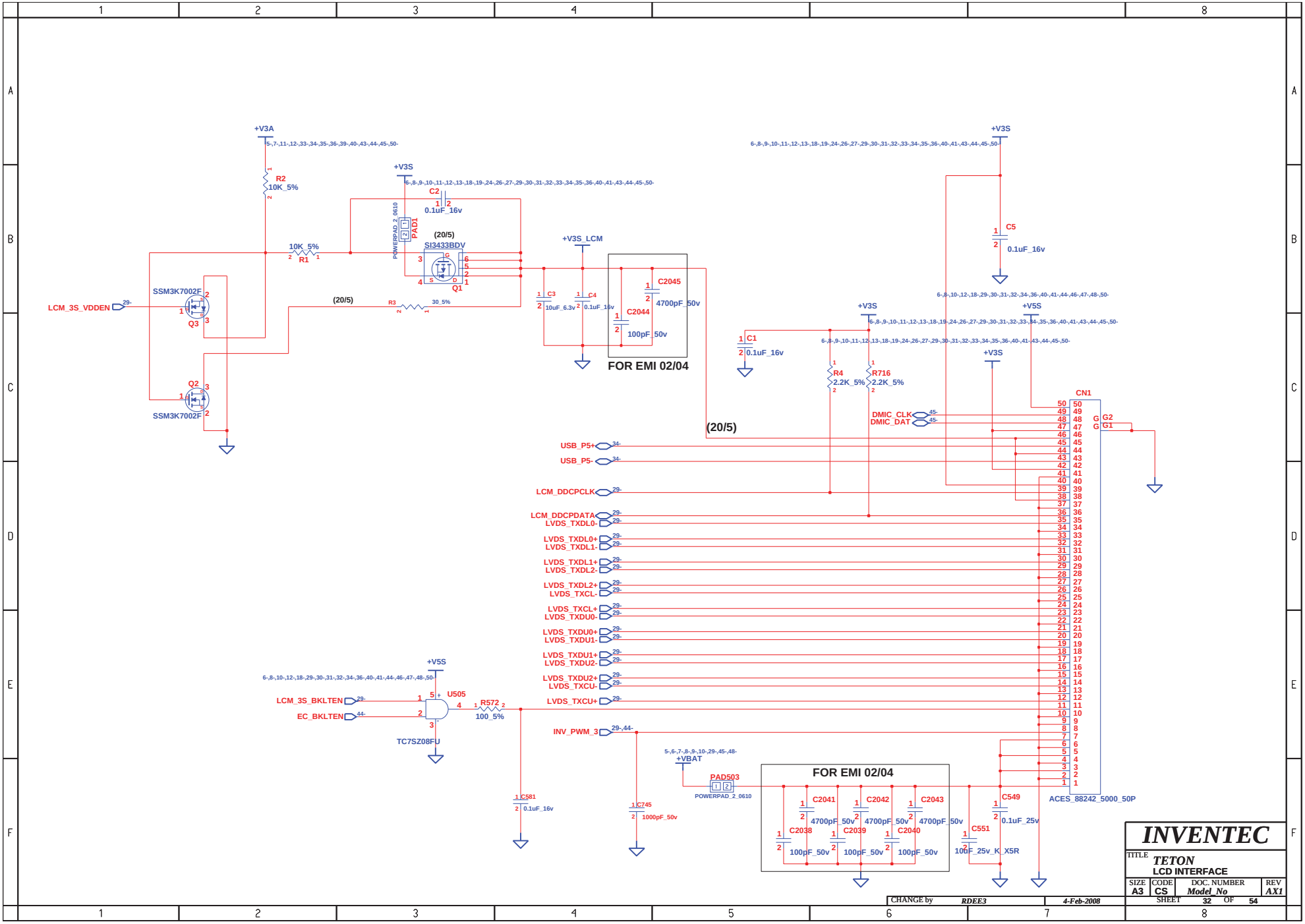
+V3A
R2
10K_5%
+V3S
C2
0.1uF_16v
PAD1
POWERPAD_2_0610
(20/5)
SI3433BDV
Q1
10K_5%
R1
LCM_3S_VDDEN
SSM3K7002F
Q3
Q2
SSM3K7002F
(20/5)
R3
30_5%
+V3S_LCM
C3
10uF_6.3v
C4
0.1uF_16v
C2045
4700pF_50v
C2044
100pF_50v
FOR EMI 02/04
+V3S
C5
0.1uF_16v
C1
0.1uF_16v
+V3S
R4
2.2K_5%
R716
2.2K_5%
+V5S
+V3S
CN1
DMIC_CLK
DMIC_DAT
(20/5)
USB_P5+
USB_P5-
LCM_DDCPCLK
LCM_DDCPDATA
LVDS_TXDL0-
LVDS_TXDL0+
LVDS_TXDL1-
LVDS_TXDL1+
LVDS_TXDL2-
LVDS_TXDL2+
LVDS_TXCL-
LVDS_TXCL+
LVDS_TXDU0-
LVDS_TXDU0+
LVDS_TXDU1-
LVDS_TXDU1+
LVDS_TXDU2-
LVDS_TXDU2+
LVDS_TXCU-
LVDS_TXCU+
INV_PWM_3
G2
G1
ACES_88242_5000_50P
+V5S
U505
LCM_3S_BKLTEN
EC_BKLTEN
TC7SZ08FU
R572
100_5%
C581
0.1uF_16v
C745
1000pF_50v
+VBAT
PAD503
POWERPAD_2_0610
FOR EMI 02/04
C2041
4700pF_50v
C2042
4700pF_50v
C2043
4700pF_50v
C2038
100pF_50v
C2039
100pF_50v
C2040
100pF_50v
C549
0.1uF_25v
C551
10uF_25v_K_X5R
INVENTEC
TITLE
TETON
LCD INTERFACE
SIZE A3
CODE CS
DOC. NUMBER Model_No
REV AX1
SHEET 32 OF 54
CHANGE by RDEE3
4-Feb-2008

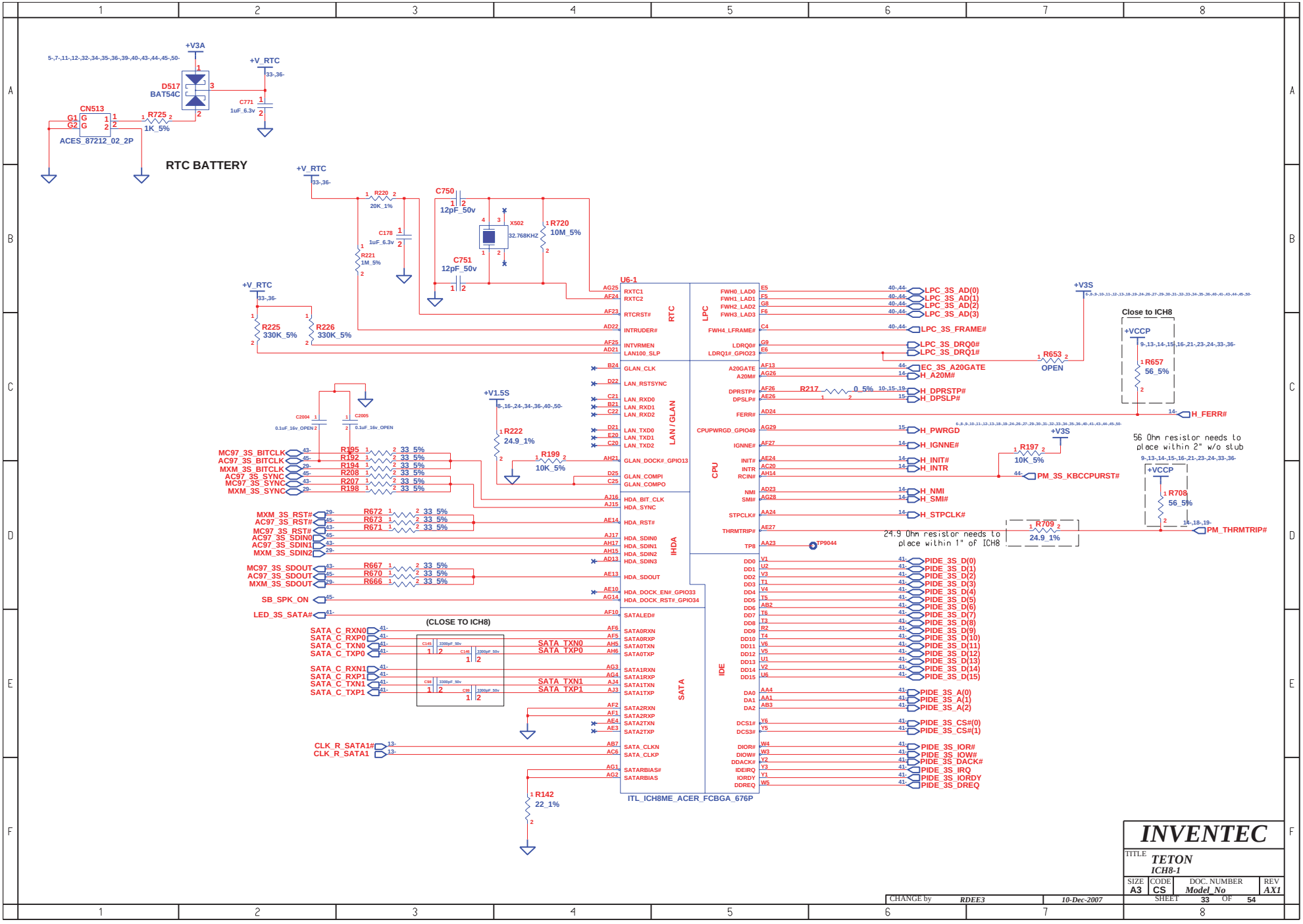
RTC BATTERY
CN513
ACES_87212_02_2P
D517
BAT54C
R725
1K_5%
C771
1uF_6.3v
+V3A
+V_RTC
R220
20K_1%
C178
1uF_6.3v
R221
1M_5%
C750
12pF_50v
C751
12pF_50v
X502
32.768KHZ
R720
10M_5%
R225
330K_5%
R226
330K_5%
U6-1
RTC
LPC
LAN / GLAN
CPU
IHDA
SATA
IDE
ITL_ICH8ME_ACER_FCBGA_676P
LPC_3S_AD(0)
LPC_3S_AD(1)
LPC_3S_AD(2)
LPC_3S_AD(3)
LPC_3S_FRAME#
LPC_3S_DRQ0#
LPC_3S_DRQ1#
EC_3S_A20GATE
H_A20M#
H_DPRSTP#
H_DPSLP#
H_FERR#
H_PWRGD
H_IGNNE#
H_INIT#
H_INTR
PM_3S_KBCCPURST#
H_NMI#
H_SMI#
H_STPCLK#
PM_THRMTRIP#
R653
OPEN
+V3S
Close to ICH8
+VCCP
R657
56_5%
R217
0_5%
R197
10K_5%
56 Ohm resistor needs to place within 2" w/o stub
R708
56_5%
R709
24.9_1%
24.9 Ohm resistor needs to place within 1" of ICH8
TP9044
+V1.5S
R222
24.9_1%
R199
10K_5%
C2004
0.1uF_16v_OPEN
C2005
0.1uF_16v_OPEN
MC97_3S_BITCLK
AC97_3S_BITCLK
MXM_3S_BITCLK
AC97_3S_SYNC
MC97_3S_SYNC
MXM_3S_SYNC
R195
R192
R194
R208
R207
R198
33_5%
MXM_3S_RST#
AC97_3S_RST#
MC97_3S_RST#
AC97_3S_SDIN0
AC97_3S_SDIN1
MXM_3S_SDIN2
R672
R673
R671
MC97_3S_SDOUT
AC97_3S_SDOUT
MXM_3S_SDOUT
R667
R670
R666
SB_SPK_ON
LED_3S_SATA#
(CLOSE TO ICH8)
SATA_C_RXN0
SATA_C_RXP0
SATA_C_TXN0
SATA_C_TXP0
SATA_C_RXN1
SATA_C_RXP1
SATA_C_TXN1
SATA_C_TXP1
SATA_TXN0
SATA_TXP0
SATA_TXN1
SATA_TXP1
CLK_R_SATA1#
CLK_R_SATA1
R142
22_1%
PIDE_3S_D(0)
PIDE_3S_D(1)
PIDE_3S_D(2)
PIDE_3S_D(3)
PIDE_3S_D(4)
PIDE_3S_D(5)
PIDE_3S_D(6)
PIDE_3S_D(7)
PIDE_3S_D(8)
PIDE_3S_D(9)
PIDE_3S_D(10)
PIDE_3S_D(11)
PIDE_3S_D(12)
PIDE_3S_D(13)
PIDE_3S_D(14)
PIDE_3S_D(15)
PIDE_3S_A(0)
PIDE_3S_A(1)
PIDE_3S_A(2)
PIDE_3S_CS#(0)
PIDE_3S_CS#(1)
PIDE_3S_IOR#
PIDE_3S_IOW#
PIDE_3S_DACK#
PIDE_3S_IRQ
PIDE_3S_IORDY
PIDE_3S_DREQ
INVENTEC
TITLE
TETON
ICH8-1
SIZE A3
CODE CS
DOC. NUMBER Model_No
REV AX1
CHANGE by RDEE3
10-Dec-2007
SHEET 33 OF 54

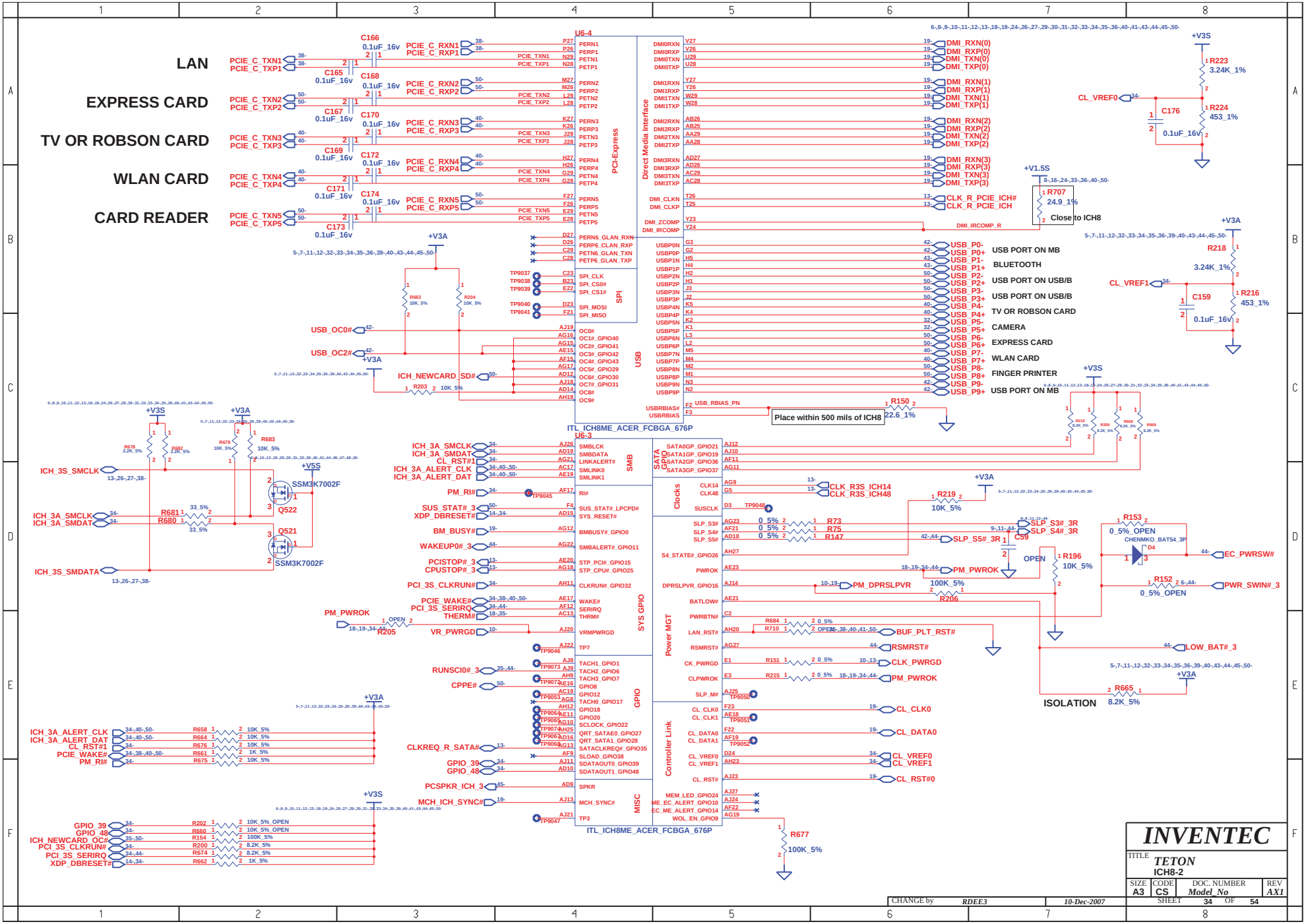
LAN
EXPRESS CARD
TV OR ROBSON CARD
WLAN CARD
CARD READER
U6-4
PCI-Express
Direct Media Interface
SPI
USB
ITL_ICH8ME_ACER_FCBGA_676P
USB PORT ON MB
BLUETOOTH
USB PORT ON USB/B
USB PORT ON USB/B
TV OR ROBSON CARD
CAMERA
EXPRESS CARD
WLAN CARD
FINGER PRINTER
USB PORT ON MB
Close to ICH8
Place within 500 mils of ICH8
U6-3
SMB
SATA GPIO
Clocks
Power MGT
SYS GPIO
GPIO
Controller Link
MISC
ITL_ICH8ME_ACER_FCBGA_676P
ISOLATION
INVENTEC
TITLE
TETON
ICH8-2
SIZE A3
CODE CS
DOC. NUMBER Model_No
REV AX1
CHANGE by RDEE3
10-Dec-2007
SHEET 34 OF 54

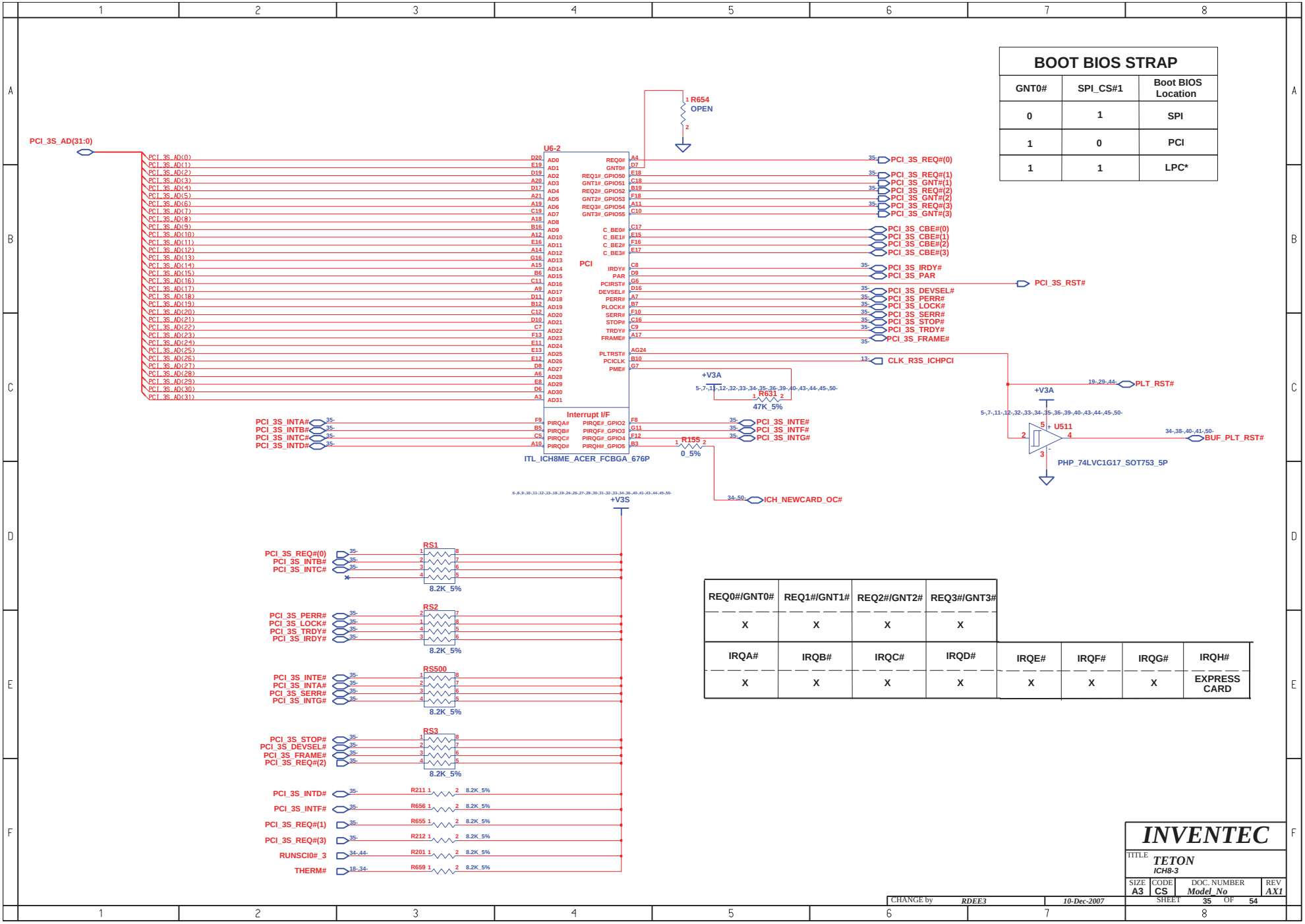

BOOT BIOS STRAP

GNT0#	SPI_CS#1	Boot BIOS Location
0	1	SPI
1	0	PCI
1	1	LPC*

REQ0#/GNT0#	REQ1#/GNT1#	REQ2#/GNT2#	REQ3#/GNT3#
X	X	X	X

IRQA#	IRQB#	IRQC#	IRQD#	IRQE#	IRQF#	IRQG#	IRQH#
X	X	X	X	X	X	X	EXPRESS CARD

INVENTEC

TITLE: TETON
ICH8-3

SIZE	CODE	DOC. NUMBER	REV
A3	CS	Model_No	AX1

CHANGE by RDEE3 | 10-Dec-2007 | SHEET 35 OF 54

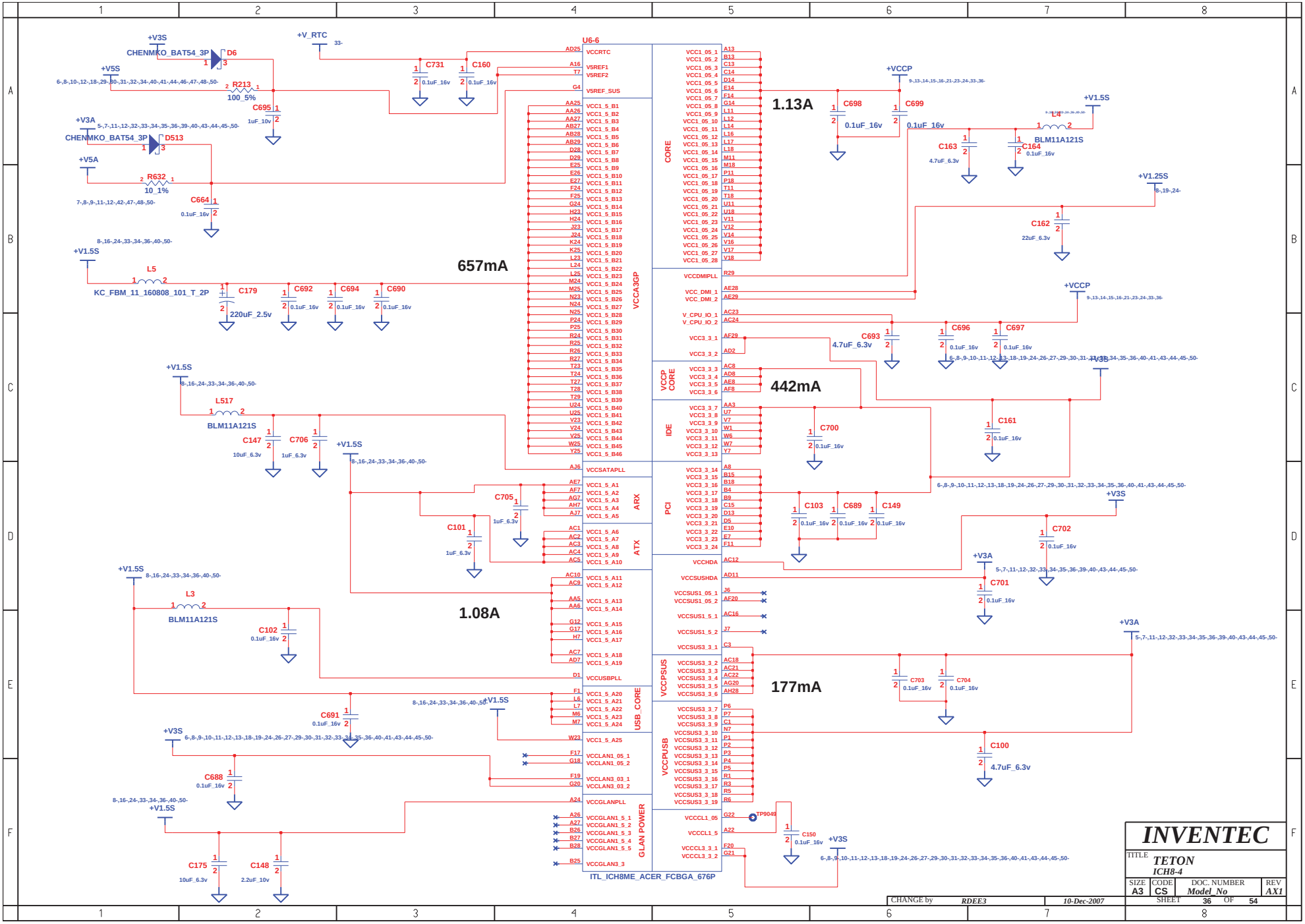
U6-6
ITL_ICH8ME_ACER_FCBGA_676P
CORE
VCCA3GP
VCCP CORE
IDE
PCI
ARX
ATX
USB_CORE
VCCPSUS
VCCPUSB
GLAN POWER
1.13A
657mA
442mA
1.08A
177mA
+V3S
CHENMKO_BAT54_3P
D6
+V5S
R213
100_5%
+V_RTC
C731
C160
C695
+V3A
CHENMKO_BAT54_3P
D513
+V5A
R632
10_1%
C664
+V1.5S
L5
KC_FBM_11_160808_101_T_2P
C179
220uF_2.5v
C692
C694
C690
L517
BLM11A121S
C147
C706
C705
C101
L3
BLM11A121S
C102
C691
C688
C175
C148
+V1.25S
C162
22uF_6.3v
+VCCP
C698
C699
0.1uF_16v
C163
4.7uF_6.3v
C164
L4
BLM11A121S
C693
4.7uF_6.3v
C696
C697
C161
C700
C103
C689
C149
C702
C701
C703
C704
C100
4.7uF_6.3v
C150
TP9049
INVENTEC
TITLE
TETON
ICH8-4
SIZE A3
CODE CS
DOC. NUMBER Model_No
REV AX1
CHANGE by RDEE3
10-Dec-2007
SHEET 36 OF 54

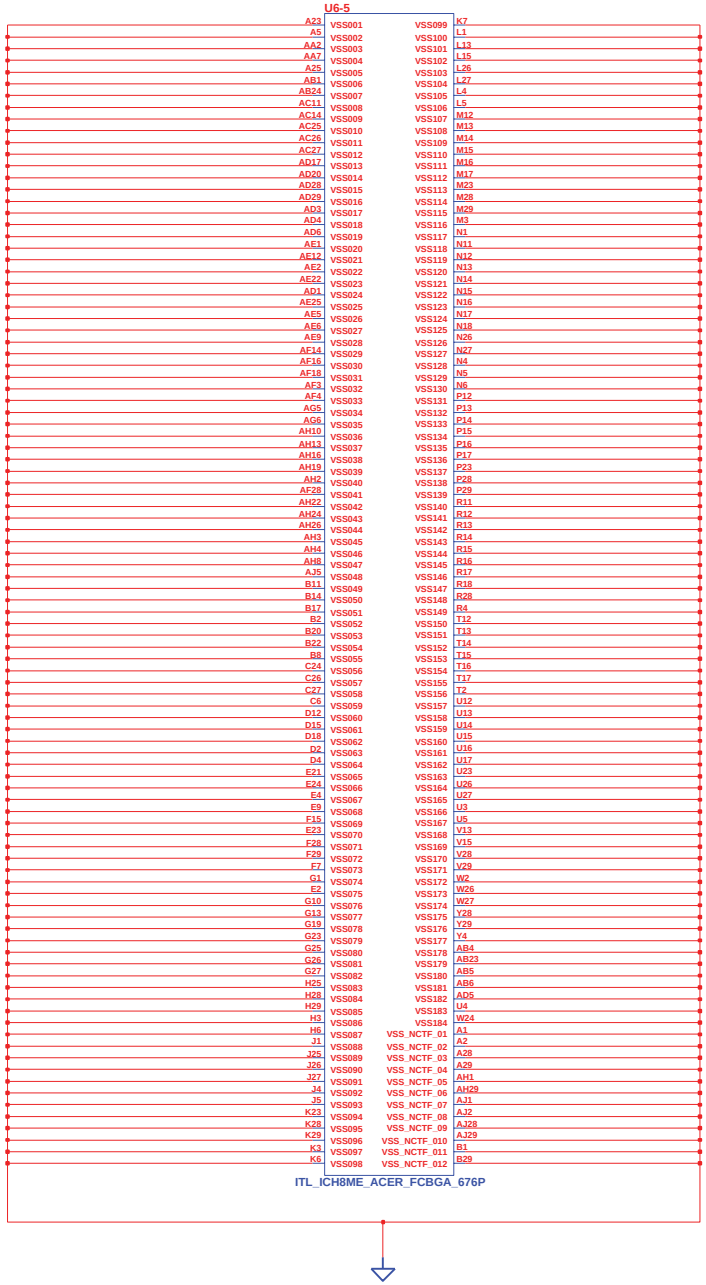

INVENTEC			
TITLE TETON ICH8-5			
SIZE A3	CODE CS	DOC. NUMBER Model_No	REV AX1
CHANGE by RDEE3	10-Dec-2007	SHEET 37 OF 54	

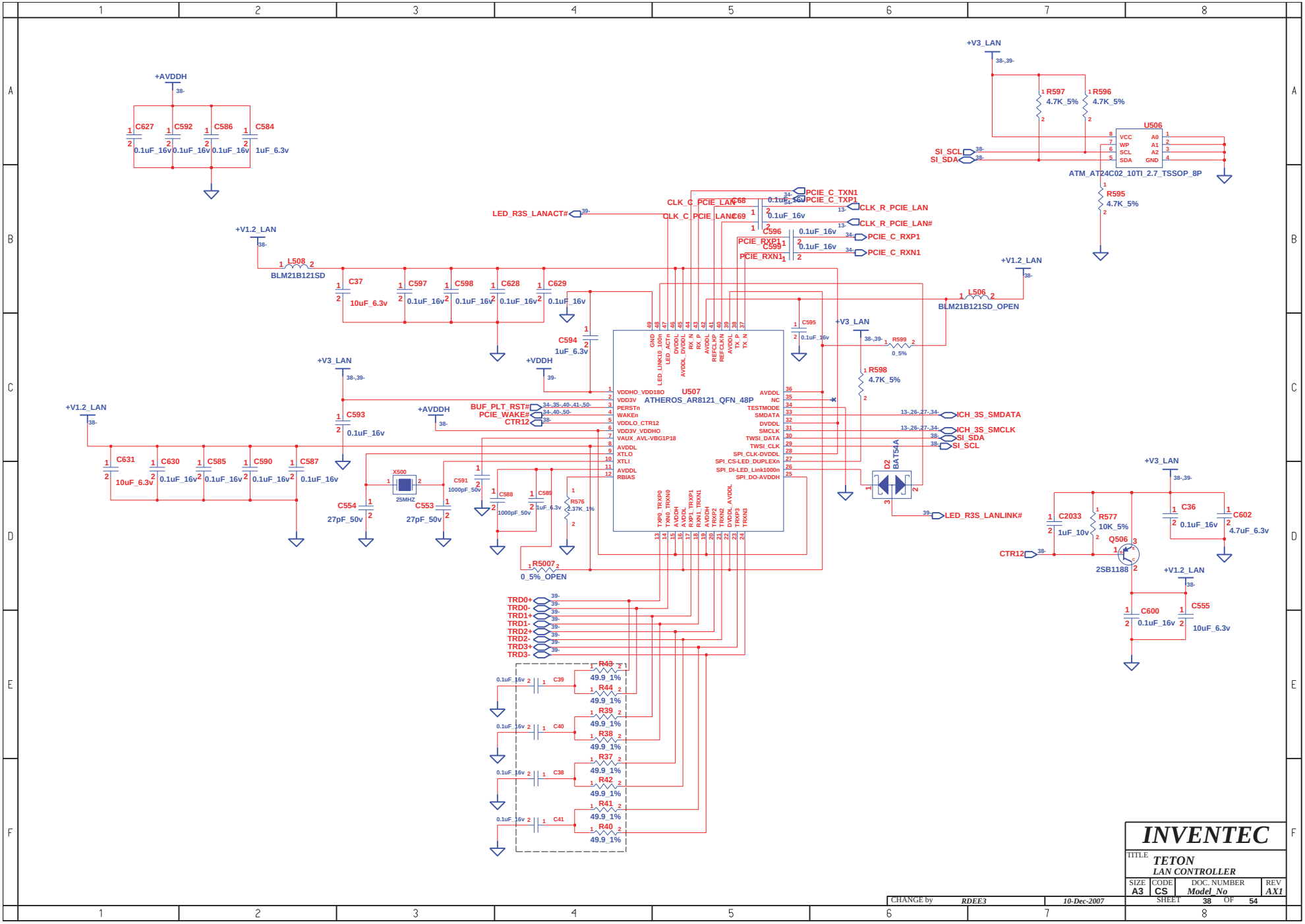
+AVDDH
C627 0.1uF_16v
C592 0.1uF_16v
C586 0.1uF_16v
C584 1uF_6.3v
+V3_LAN
R597 4.7K_5%
R596 4.7K_5%
U506
VCC WP SCL SDA
A0 A1 A2 GND
SI_SCL
SI_SDA
ATM_AT24C02_10TI_2.7_TSSOP_8P
R595 4.7K_5%
PCIE_C_TXN1
PCIE_C_TXP1
CLK_R_PCIE_LAN
CLK_R_PCIE_LAN#
PCIE_C_RXP1
PCIE_C_RXN1
CLK_C_PCIE_LAN
CLK_C_PCIE_LAN#
C568 0.1uF_16v
C569 0.1uF_16v
C596 0.1uF_16v
C599 0.1uF_16v
PCIE_RXP1
PCIE_RXN1
LED_R3S_LANACT#
+V1.2_LAN
L508 BLM21B121SD
C37 10uF_6.3v
C597 0.1uF_16v
C598 0.1uF_16v
C628 0.1uF_16v
C629 0.1uF_16v
C594 1uF_6.3v
L506 BLM21B121SD_OPEN
C595 0.1uF_16v
R599 0_5%
R598 4.7K_5%
+VDDH
U507
ATHEROS_AR8121_QFN_48P
VDDHO_VDD18O
VDD3V
PERSTn
WAKEn
VDDLO_CTR12
VDD3V_VDDHO
VAUX_AVL-VBG1P18
AVDDL
XTLO
XTLI
AVDDL
RBIAS
AVDDL
NC
TESTMODE
SMDATA
DVDDL
SMCLK
TWSI_DATA
TWSI_CLK
SPI_CLK-DVDDL
SPI_CS-LED_DUPLEXn
SPI_DI-LED_Link1000n
SPI_DO-AVDDH
BUF_PLT_RST#
PCIE_WAKE#
CTR12
ICH_3S_SMDATA
ICH_3S_SMCLK
SI_SDA
SI_SCL
D2 BAT54A
LED_R3S_LANLINK#
C593 0.1uF_16v
C631 10uF_6.3v
C630 0.1uF_16v
C585 0.1uF_16v
C590 0.1uF_16v
C587 0.1uF_16v
X500 25MHZ
C554 27pF_50v
C553 27pF_50v
C591 1000pF_50v
C588 1000pF_50v
C589 1uF_6.3v
R576 2.37K_1%
R5007 0_5%_OPEN
C2033 1uF_10v
R577 10K_5%
Q506 2SB1188
CTR12
C36 0.1uF_16v
C602 4.7uF_6.3v
C600 0.1uF_16v
C555 10uF_6.3v
TRD0+
TRD0-
TRD1+
TRD1-
TRD2+
TRD2-
TRD3+
TRD3-
R43 49.9_1%
R44 49.9_1%
R39 49.9_1%
R38 49.9_1%
R37 49.9_1%
R42 49.9_1%
R41 49.9_1%
R40 49.9_1%
C39 0.1uF_16v
C40 0.1uF_16v
C38 0.1uF_16v
C41 0.1uF_16v
INVENTEC
TITLE TETON
LAN CONTROLLER
SIZE A3
CODE CS
DOC. NUMBER Model_No
REV AX1
CHANGE by RDEE3
10-Dec-2007
SHEET 38 OF 54

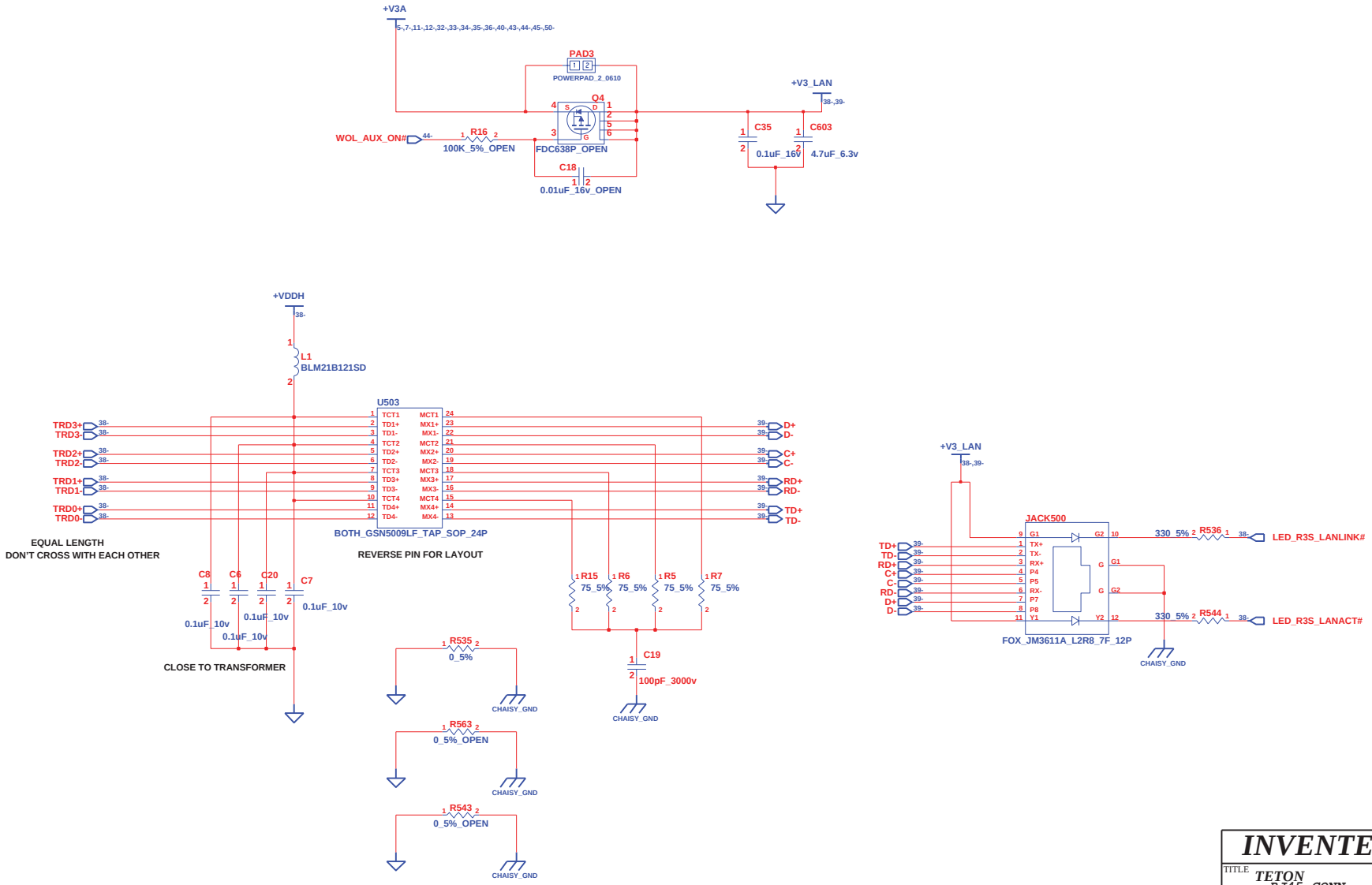

INVENTEC

TITLE TETON RJ45 CONN

SIZE	CODE	DOC. NUMBER	REV
A3	CS	Model_No	AX1

CHANGE by RDEE3 10-Dec-2007

SHEET 39 OF 54

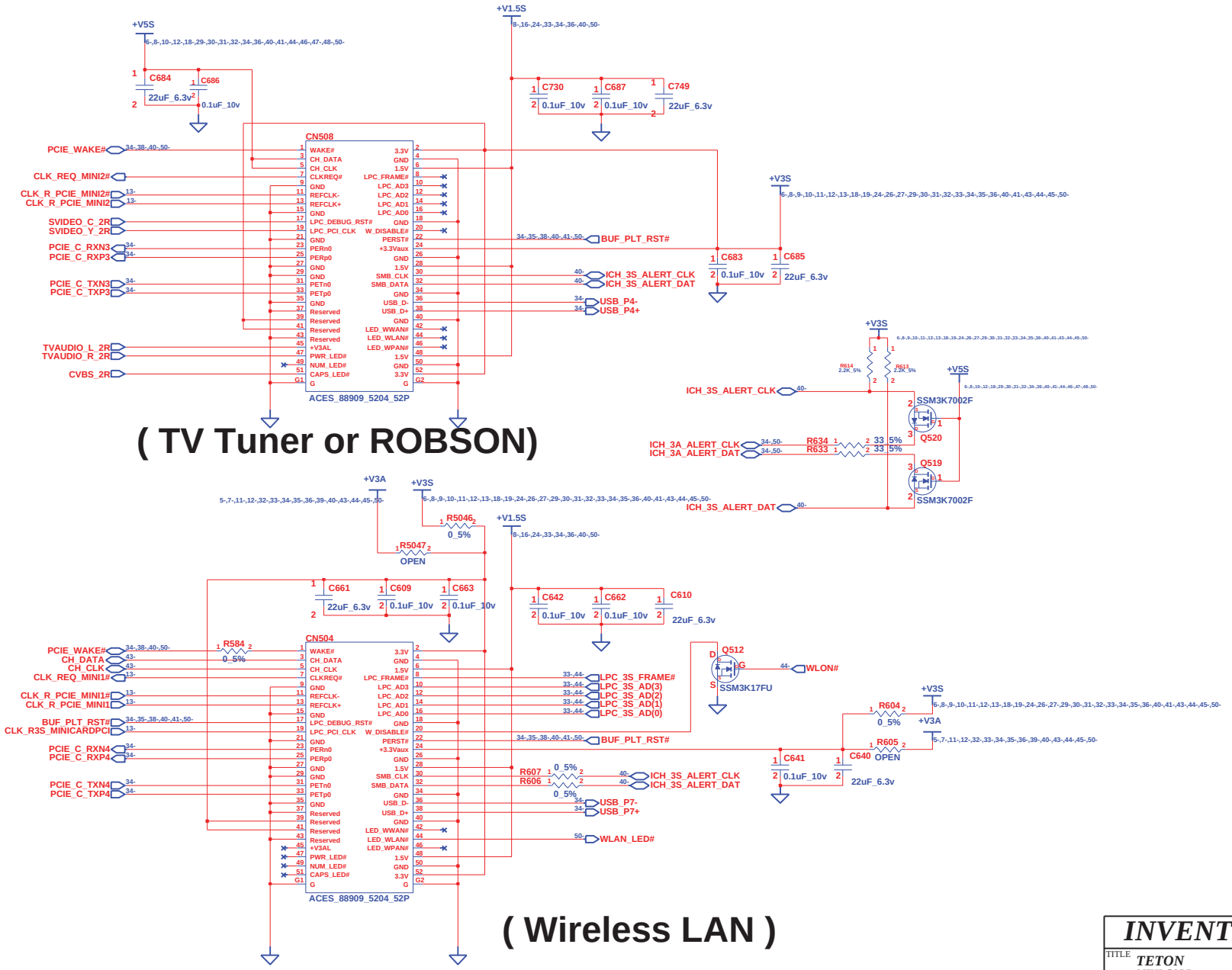

INVENTEC			
TITLE TETON MINI CARD			
SIZE A3	CODE CS	DOC. NUMBER Model_No	REV AX1
CHANGE by RDEE3	8-Jan-2008	SHEET 40 OF 54	

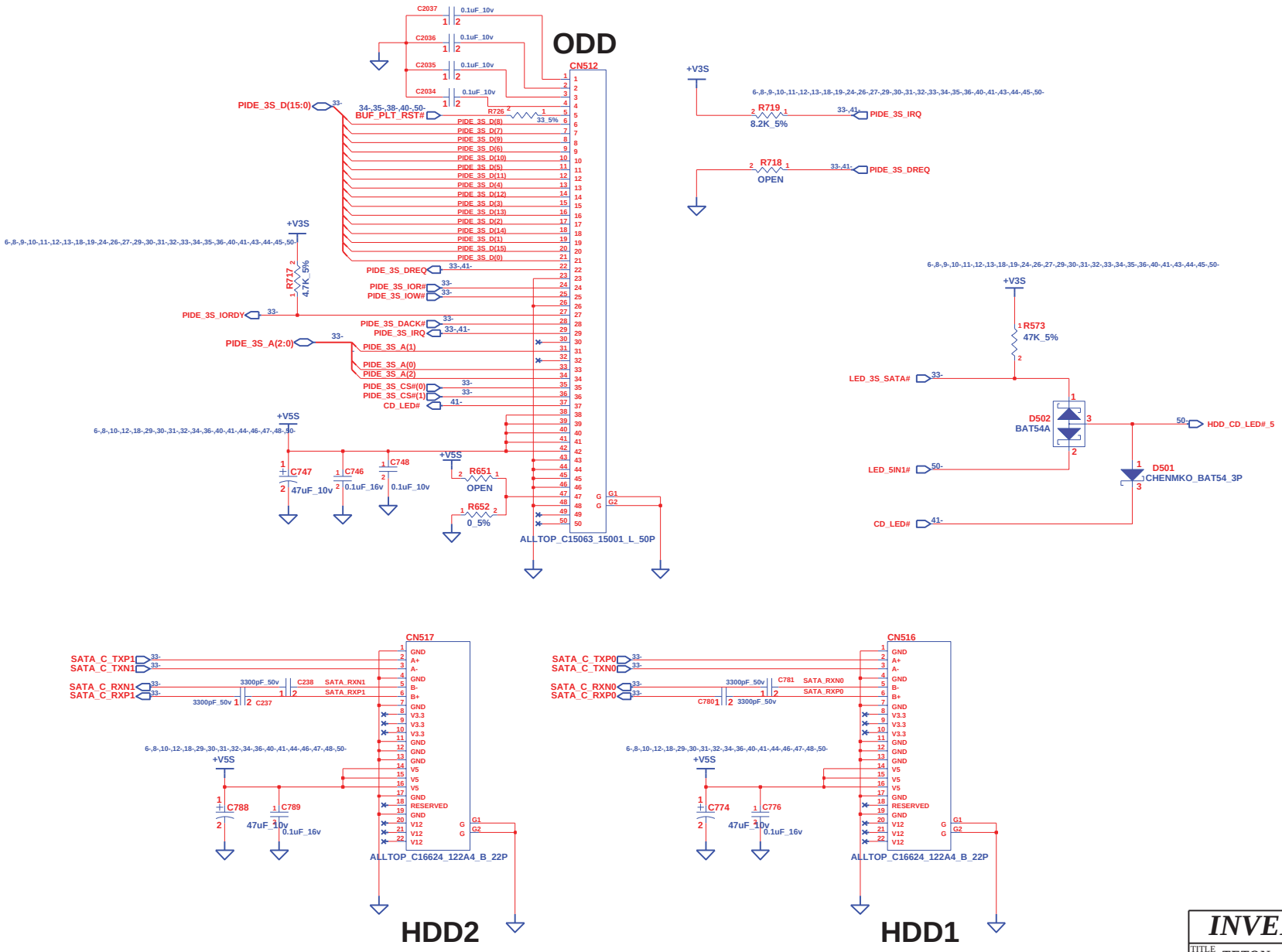

INVENTEC

TITLE TETON
ODD & HDD CONN

SIZE	CODE	DOC. NUMBER	REV
A3	CS	Model_No	AX1

CHANGE by RDEE3 10-Dec-2007 SHEET 41 OF 54

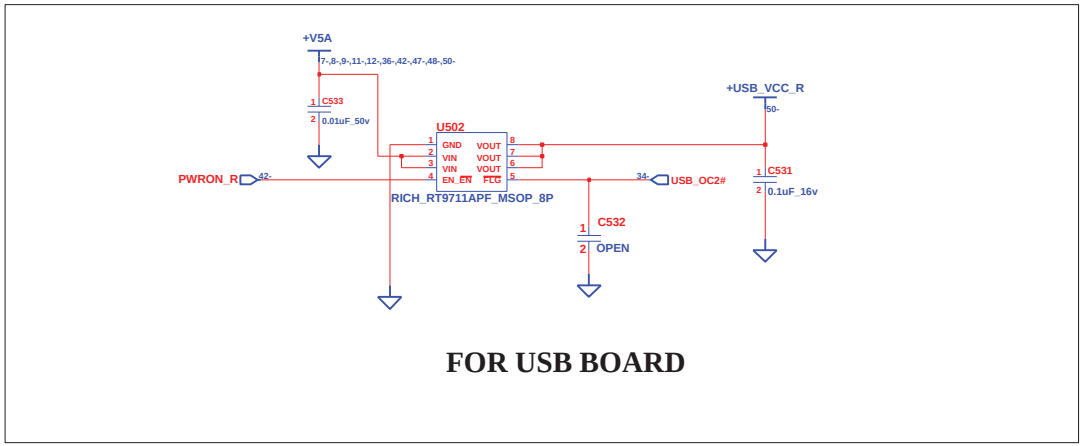

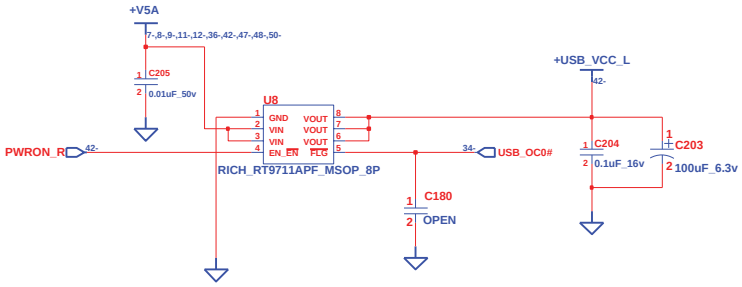

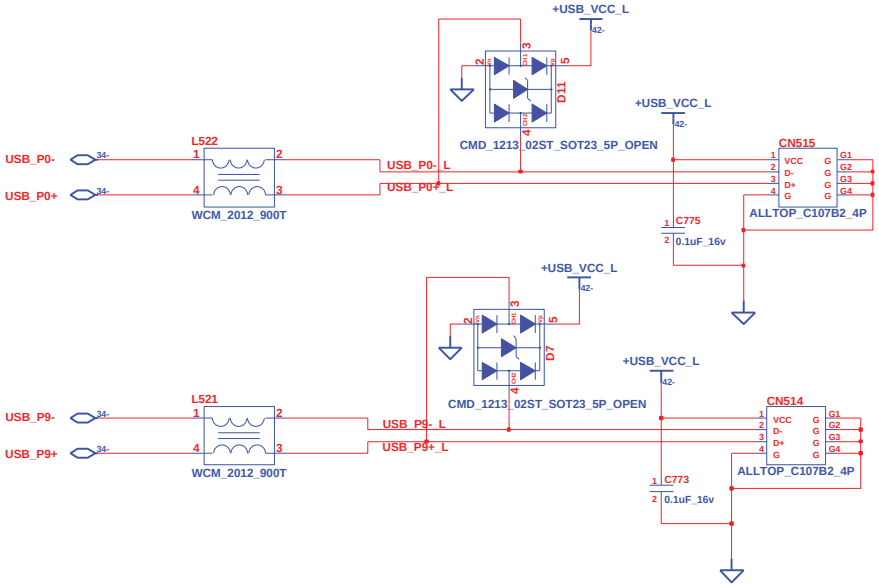

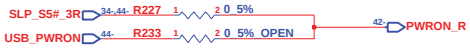

USB POWER STATE	S0	S3	S5
AC MODE	ON	ON	OFF
DC MODE	ON	ON	OFF

INVENTEC

TITLE: *TETON*
USB CONN

SIZE	CODE	DOC. NUMBER	REV
A3	CS	*Model_No*	*AX1*

CHANGE by *RDEE3* *10-Dec-2007* SHEET 42 OF 54

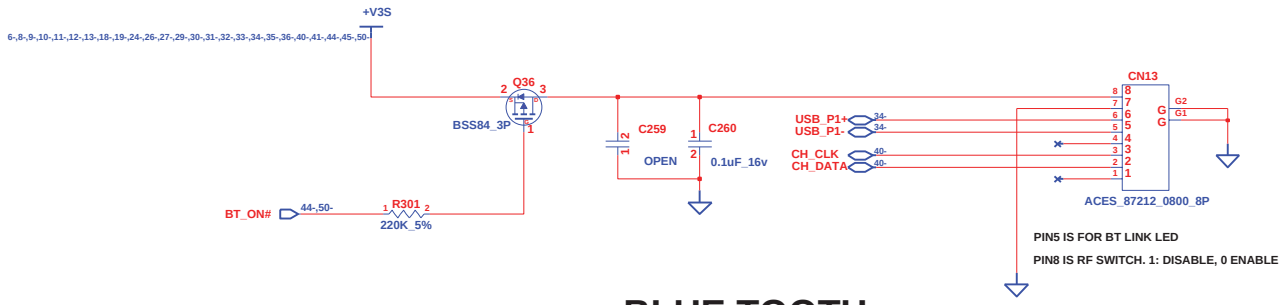

BLUE TOOTH

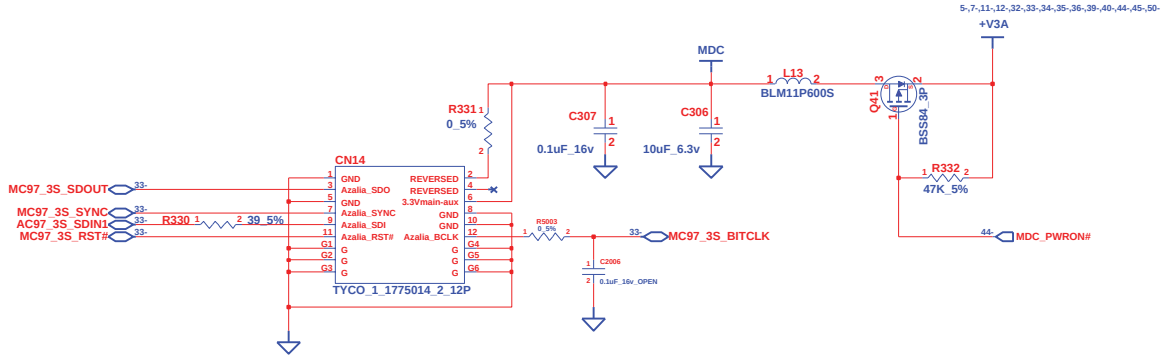

MDC

INVENTEC			
TITLE TETON BLUETOOTH			
SIZE A3	CODE CS	DOC. NUMBER Model_No	REV AX1
CHANGE by RDEE3	10-Dec-2007	SHEET 43 OF 54	

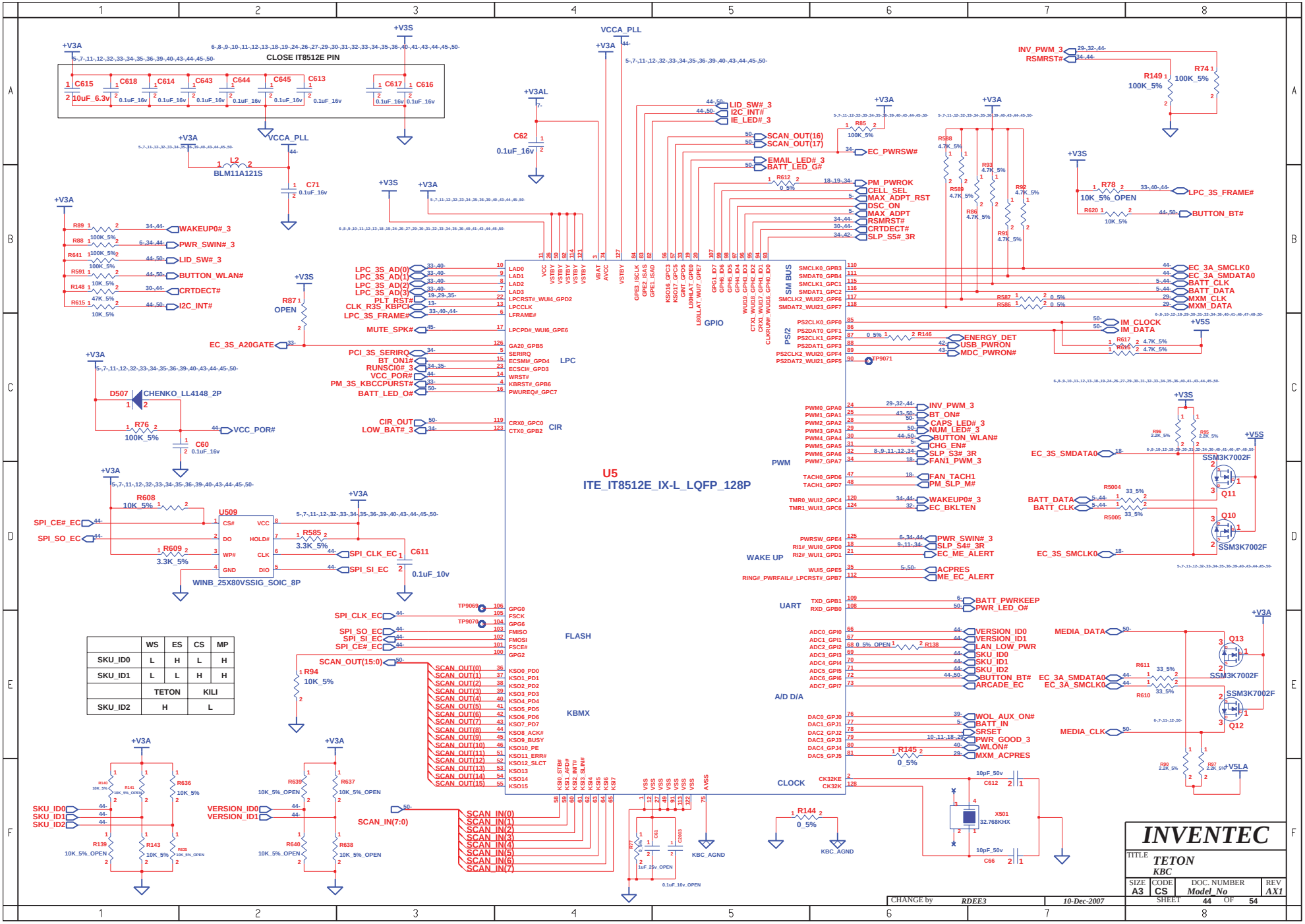

	WS	ES	CS	MP
SKU_ID0	L	H	L	H
SKU_ID1	L	L	H	H
	TETON		KILI	
SKU_ID2	H		L	

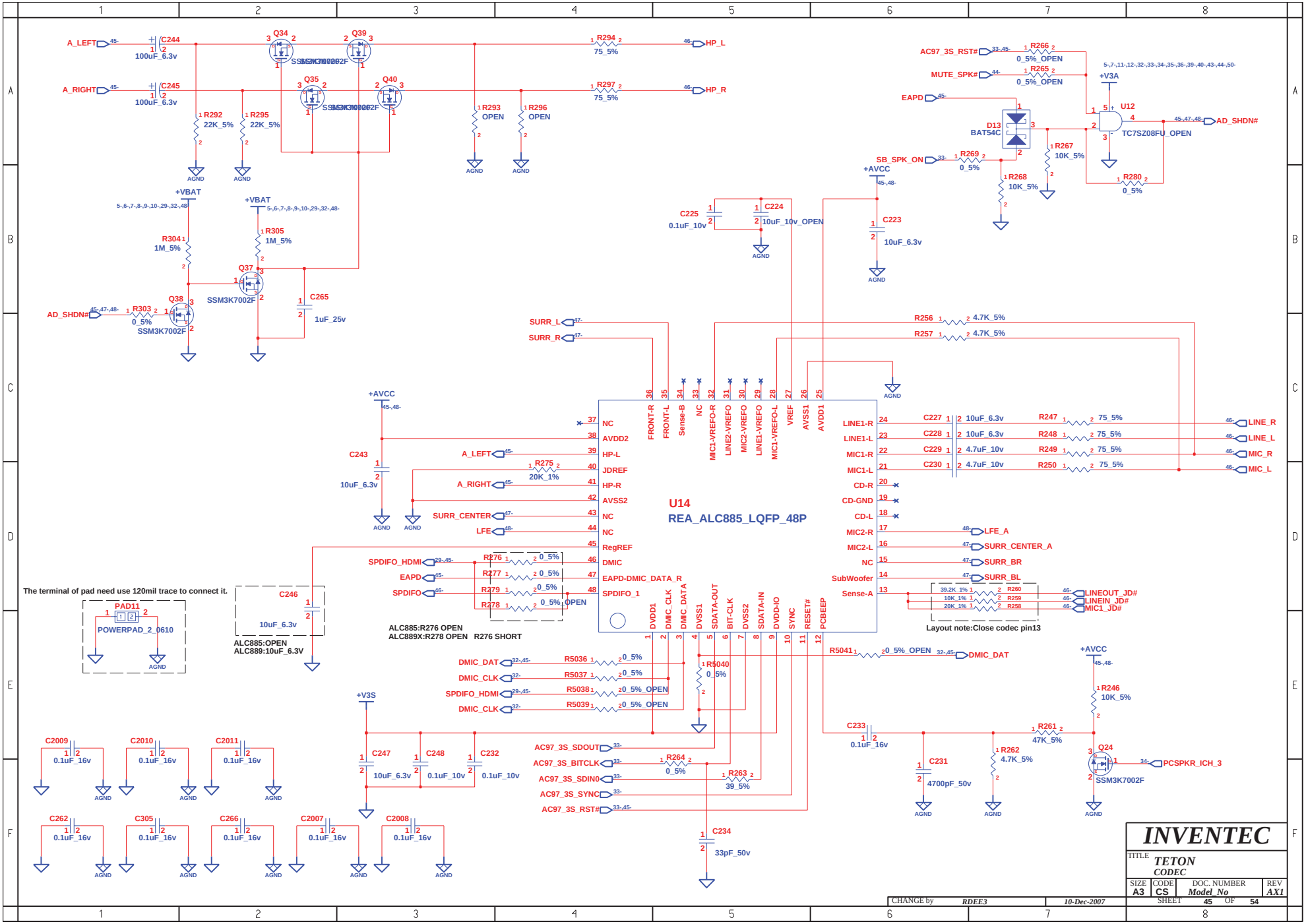
U14
REA_ALC885_LQFP_48P
The terminal of pad need use 120mil trace to connect it.
ALC885:R276 OPEN
ALC889X:R278 OPEN R276 SHORT
ALC885:OPEN
ALC889:10uF_6.3V
Layout note:Close codec pin13
INVENTEC
TITLE TETON CODEC
SIZE A3 CODE CS DOC. NUMBER Model_No REV AX1
CHANGE by RDEE3 10-Dec-2007
SHEET 45 OF 54

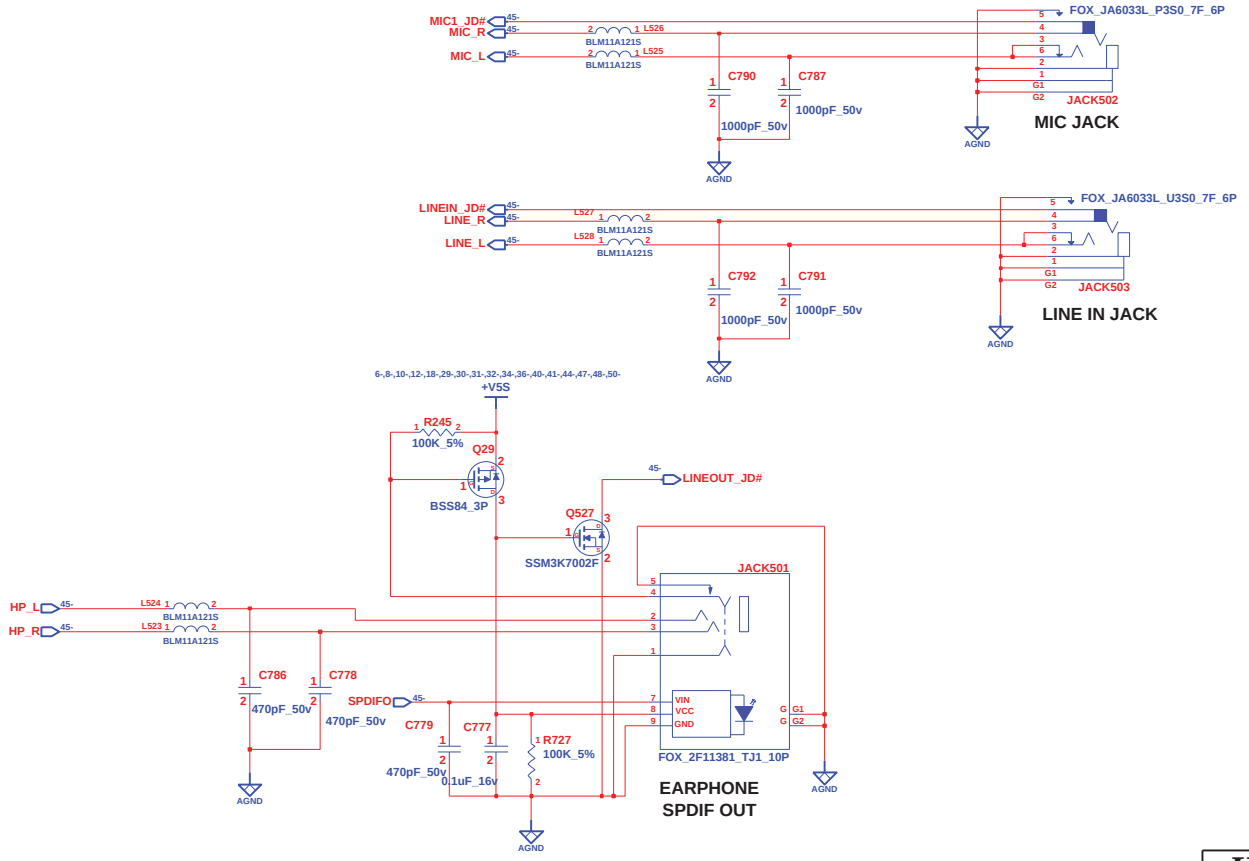

INVENTEC

TITLE *TETON*

SIZE	CODE	DOC. NUMBER	REV
A3	CS	*Model_No*	*AX1*

CHANGE by *RDEE3* *10-Dec-2007*

SHEET 46 OF 54

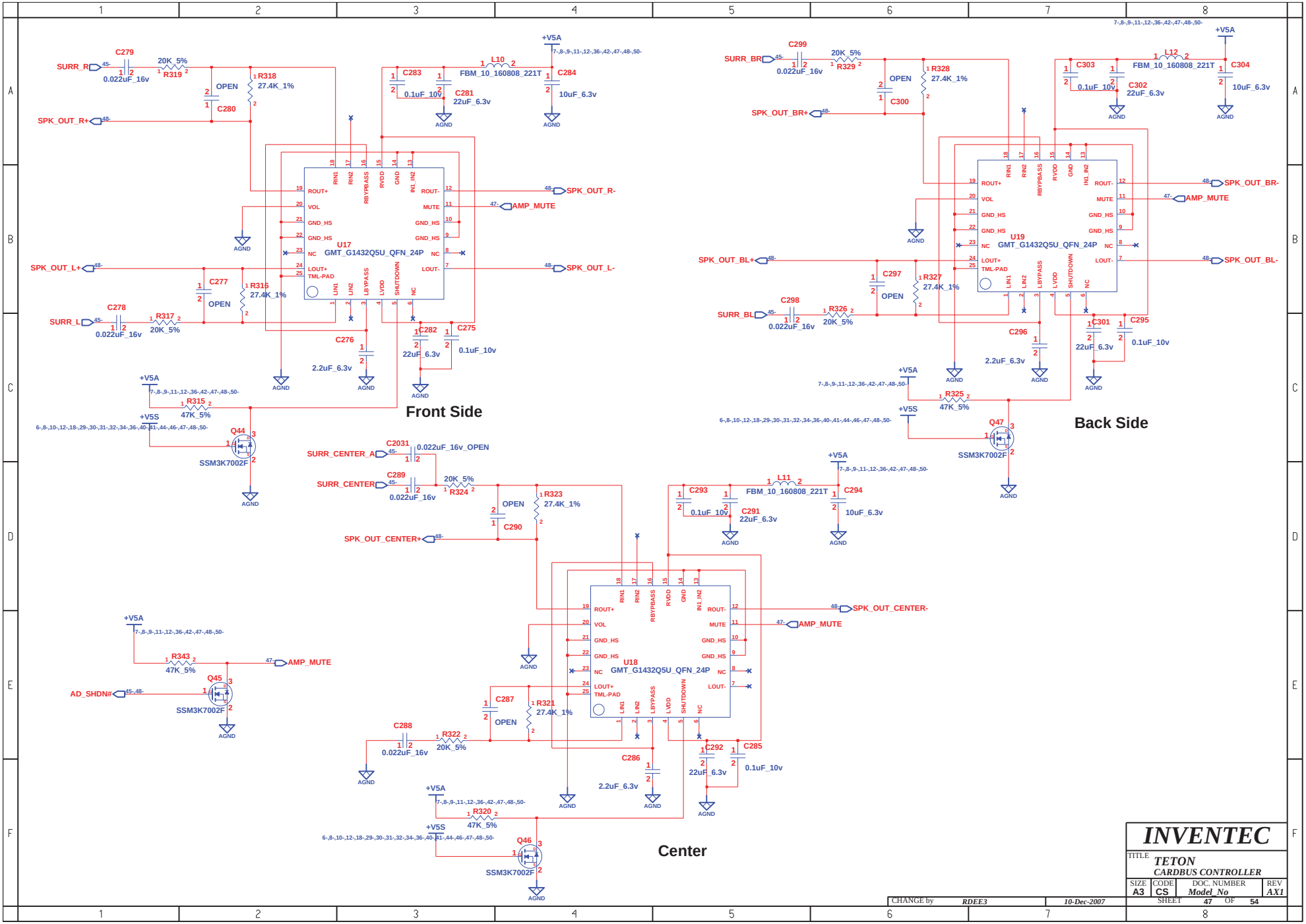

CHANGE by	RDEE3	10-Dec-2007	

INVENTEC

TITLE TETON CARDBUS CONTROLLER

SIZE	CODE	DOC. NUMBER	REV
A3	CS	Model_No	AX1

SHEET 47 OF 54

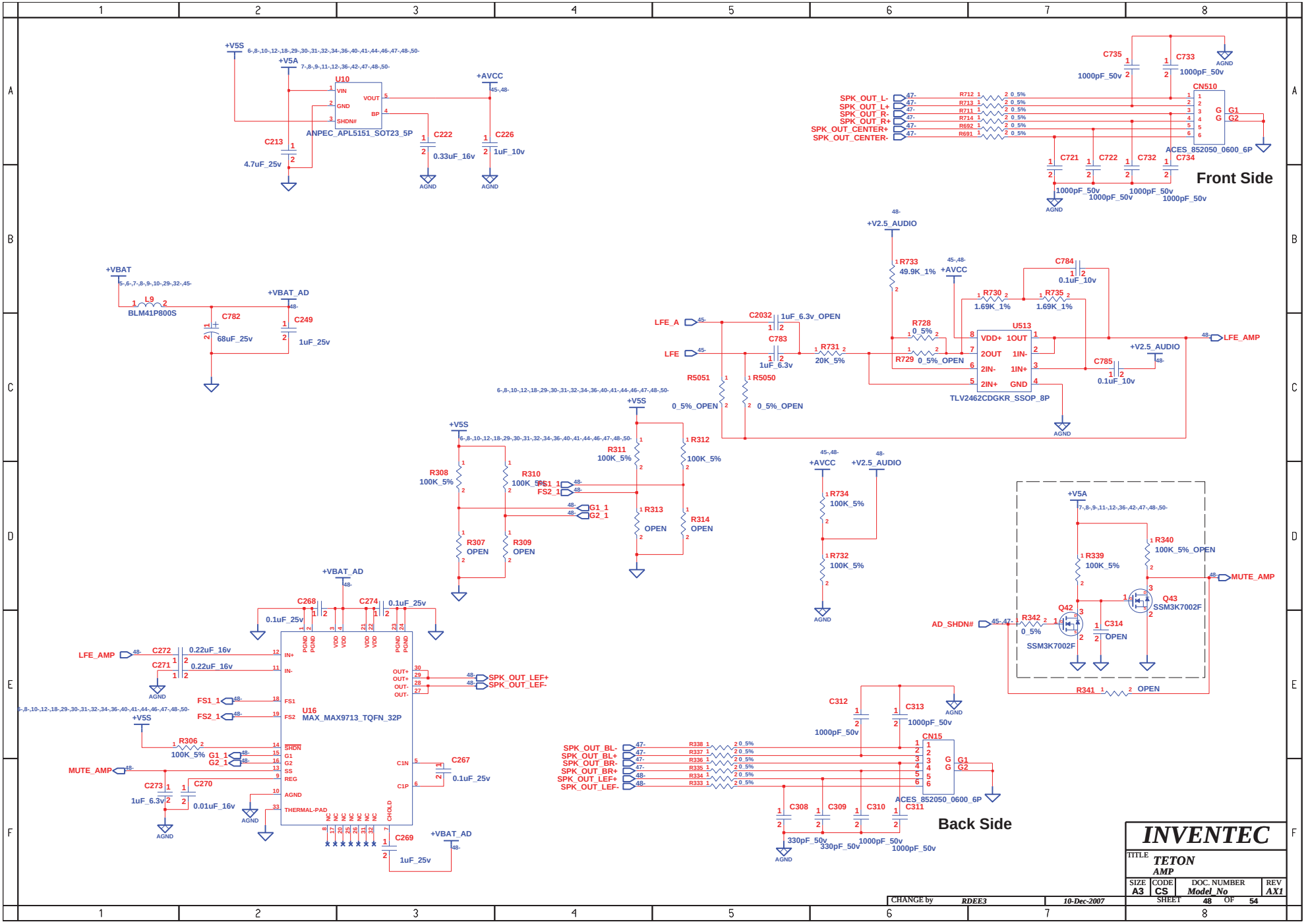
+V5S
+V5A
U10
VIN
GND
SHDN#
VOUT
BP
ANPEC_APL5151_SOT23_5P
C213
4.7uF_25v
C222
0.33uF_16v
+AVCC
C226
1uF_10v
AGND
C735
1000pF_50v
C733
1000pF_50v
CN510
SPK_OUT_L-
SPK_OUT_L+
SPK_OUT_R-
SPK_OUT_R+
SPK_OUT_CENTER+
SPK_OUT_CENTER-
R712
R713
R711
R714
R692
R691
0_5%
G1
G2
ACES_852050_0600_6P
C721
C722
C732
C734
1000pF_50v
Front Side
+VBAT
L9
BLM41P800S
+VBAT_AD
C782
68uF_25v
C249
1uF_25v
+V2.5_AUDIO
R733
49.9K_1%
C784
0.1uF_10v
R730
1.69K_1%
R735
1.69K_1%
LFE_A
C2032
1uF_6.3v_OPEN
C783
1uF_6.3v
LFE
R731
20K_5%
R728
0_5%
R729
0_5%_OPEN
U513
VDD+
1OUT
2OUT
1IN-
2IN-
1IN+
2IN+
GND
TLV2462CDGKR_SSOP_8P
C785
0.1uF_10v
LFE_AMP
R5051
R5050
0_5%_OPEN
R308
100K_5%
R310
100K_5%
FS1_1
FS2_1
G1_1
G2_1
R307
OPEN
R309
OPEN
R311
100K_5%
R312
100K_5%
R313
OPEN
R314
OPEN
R734
100K_5%
R732
100K_5%
R339
100K_5%
R340
100K_5%_OPEN
MUTE_AMP
Q42
SSM3K7002F
Q43
SSM3K7002F
AD_SHDN#
R342
0_5%
C314
OPEN
R341
OPEN
C268
0.1uF_25v
C274
0.1uF_25v
C272
0.22uF_16v
C271
0.22uF_16v
LFE_AMP
U16
MAX_MAX9713_TQFN_32P
IN+
IN-
FS1
FS2
SHDN
G1
G2
SS
REG
AGND
THERMAL-PAD
OUT+
OUT-
SPK_OUT_LEF+
SPK_OUT_LEF-
R306
100K_5%
C273
1uF_6.3v
C270
0.01uF_16v
C267
0.1uF_25v
C269
1uF_25v
C312
1000pF_50v
C313
1000pF_50v
CN15
SPK_OUT_BL-
SPK_OUT_BL+
SPK_OUT_BR-
SPK_OUT_BR+
SPK_OUT_LEF+
SPK_OUT_LEF-
R338
R337
R336
R335
R334
R333
ACES_852050_0600_6P
C308
C309
C310
C311
330pF_50v
1000pF_50v
Back Side
INVENTEC
TITLE
TETON
AMP
SIZE
A3
CODE
CS
DOC. NUMBER
Model_No
REV
AX1
SHEET
48
OF
54
CHANGE by
RDEE3
10-Dec-2007

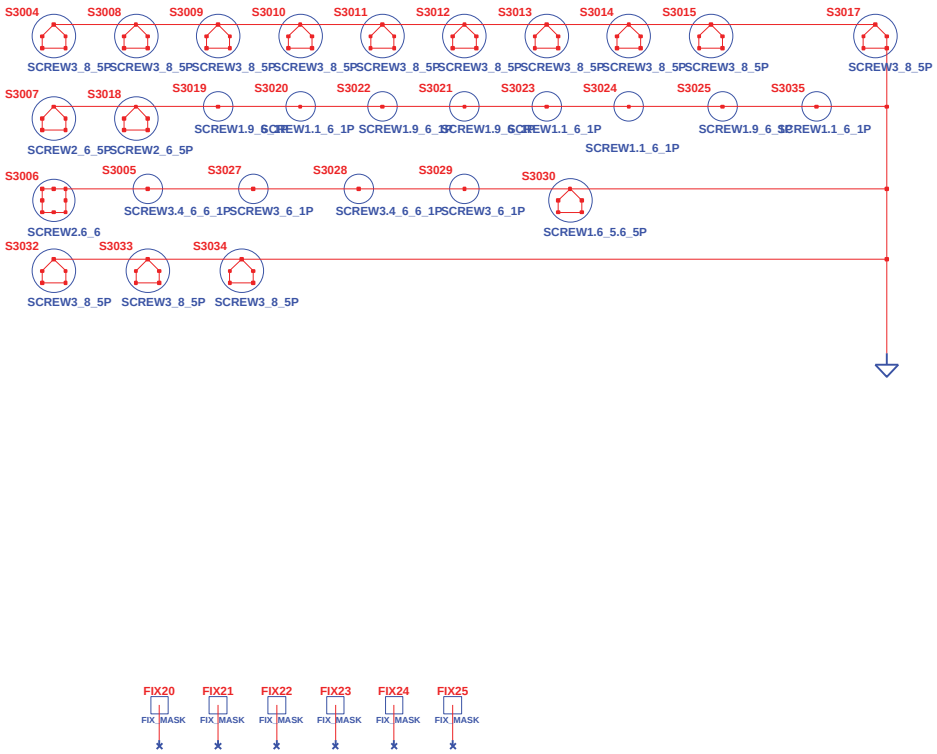

CHANGE by	RDEE3	14-Jan-2008	

INVENTEC

TITLE **TETON**
SCREW&EMC SOLUTION

SIZE	CODE	DOC. NUMBER	REV
A3	CS	Model_No	AX1

SHEET 49 OF 54

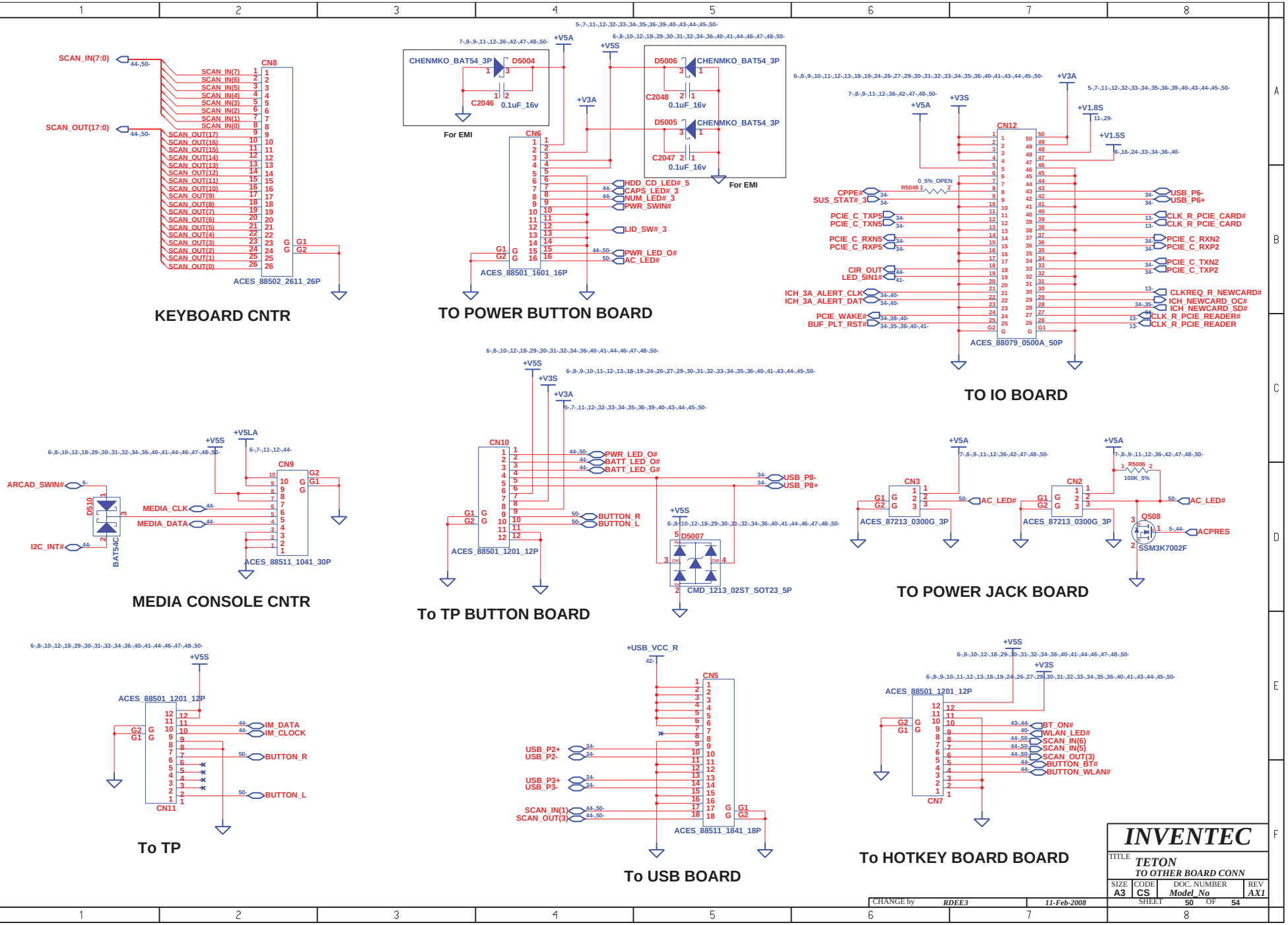
KEYBOARD CNTR
SCAN_IN(7:0)
SCAN_OUT(17:0)
CN8
ACES_88502_2611_26P
TO POWER BUTTON BOARD
CHENMKO_BAT54_3P
D5004
D5006
D5005
C2046 0.1uF_16v
C2048 0.1uF_16v
C2047 0.1uF_16v
For EMI
CN6
ACES_88501_1601_16P
HDD_CD_LED# 5
CAPS_LED# 3
NUM_LED# 3
PWR_SWIN#
LID_SW# 3
PWR_LED_O#
AC_LED#
TO IO BOARD
CN12
ACES_88079_0500A_50P
CPPE#
SUS_STAT# 3
PCIE_C_TXP5
PCIE_C_TXN5
PCIE_C_RXN5
PCIE_C_RXP5
CIR_OUT
LED_5IN1#
ICH_3A_ALERT_CLK
ICH_3A_ALERT_DAT
PCIE_WAKE#
BUF_PLT_RST#
USB_P6-
USB_P6+
CLK_R_PCIE_CARD#
CLK_R_PCIE_CARD
PCIE_C_RXN2
PCIE_C_RXP2
PCIE_C_TXN2
PCIE_C_TXP2
CLKREQ_R_NEWCARD#
ICH_NEWCARD_OC#
ICH_NEWCARD_SD#
CLK_R_PCIE_READER#
CLK_R_PCIE_READER
MEDIA CONSOLE CNTR
ARCAD_SWIN#
I2C_INT#
D510
BAT54C
MEDIA_CLK
MEDIA_DATA
CN9
ACES_88511_1041_30P
To TP BUTTON BOARD
CN10
ACES_88501_1201_12P
PWR_LED_O#
BATT_LED_O#
BATT_LED_G#
USB_P8-
USB_P8+
BUTTON_R
BUTTON_L
D5007
CMD_1213_02ST_SOT23_5P
TO POWER JACK BOARD
CN3
ACES_87213_0300G_3P
CN2
ACES_87213_0300G_3P
AC_LED#
R5006
100K_5%
Q508
SSM3K7002F
ACPRES
To TP
ACES_88501_1201_12P
CN11
IM_DATA
IM_CLOCK
BUTTON_R
BUTTON_L
To USB BOARD
CN5
ACES_88511_1841_18P
USB_P2+
USB_P2-
USB_P3+
USB_P3-
SCAN_IN(1)
SCAN_OUT(3)
To HOTKEY BOARD BOARD
ACES_88501_1201_12P
CN7
BT_ON#
WLAN_LED#
SCAN_IN(6)
SCAN_IN(5)
SCAN_OUT(3)
BUTTON_BT#
BUTTON_WLAN#
INVENTEC
TITLE
TETON
TO OTHER BOARD CONN
SIZE A3
CODE CS
DOC. NUMBER Model_No
REV AX1
SHEET 50 OF 54
CHANGE by RDEE3
11-Feb-2008

USB BOARD

TV ANT

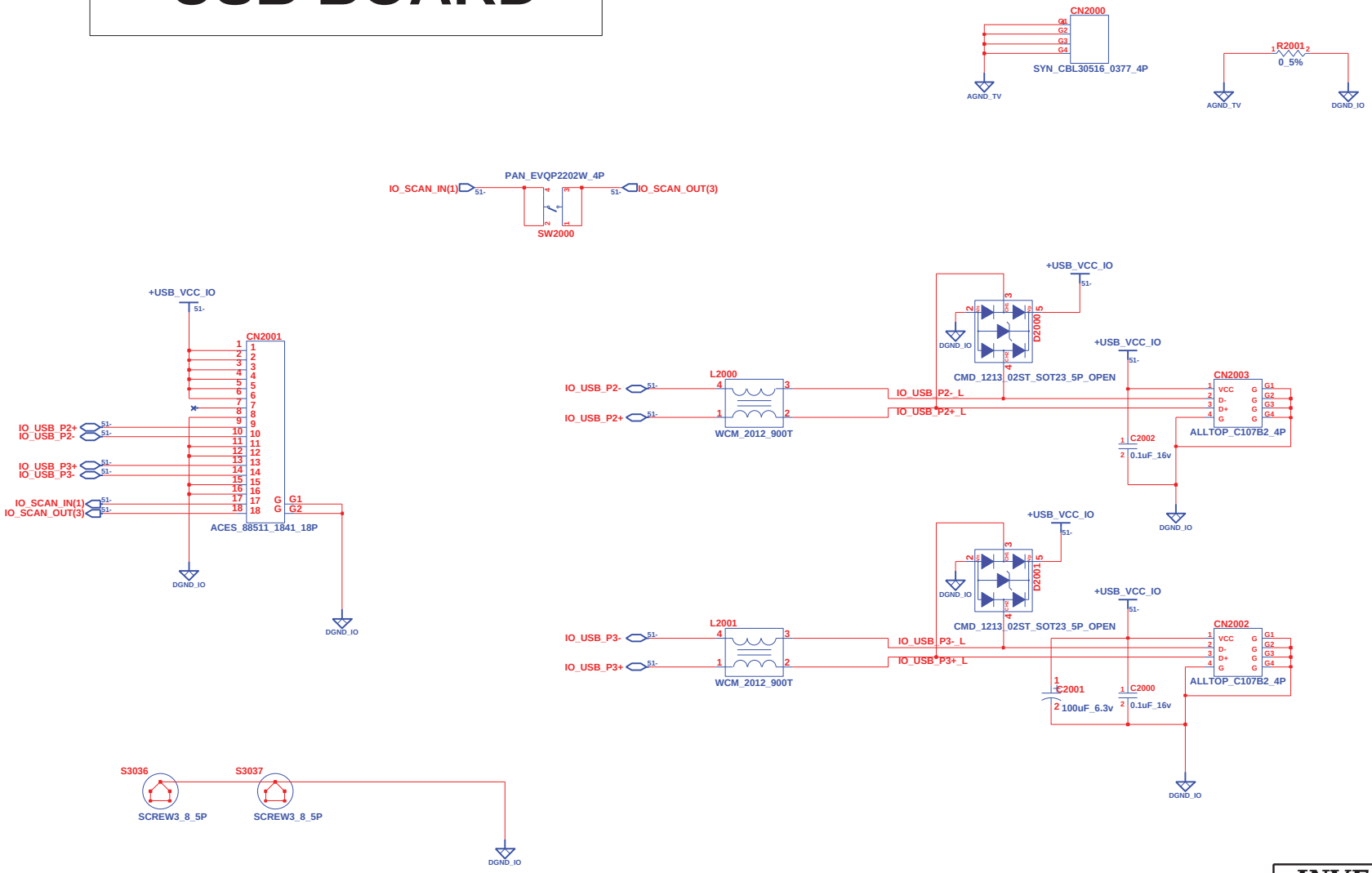

INVENTEC			
TITLE TETON USB BOARD			
SIZE A3	CODE CS	DOC. NUMBER Model_No	REV AX1
CHANGE by RDEE3	10-Dec-2007	SHEET 51 OF 54	

PowerButton Board

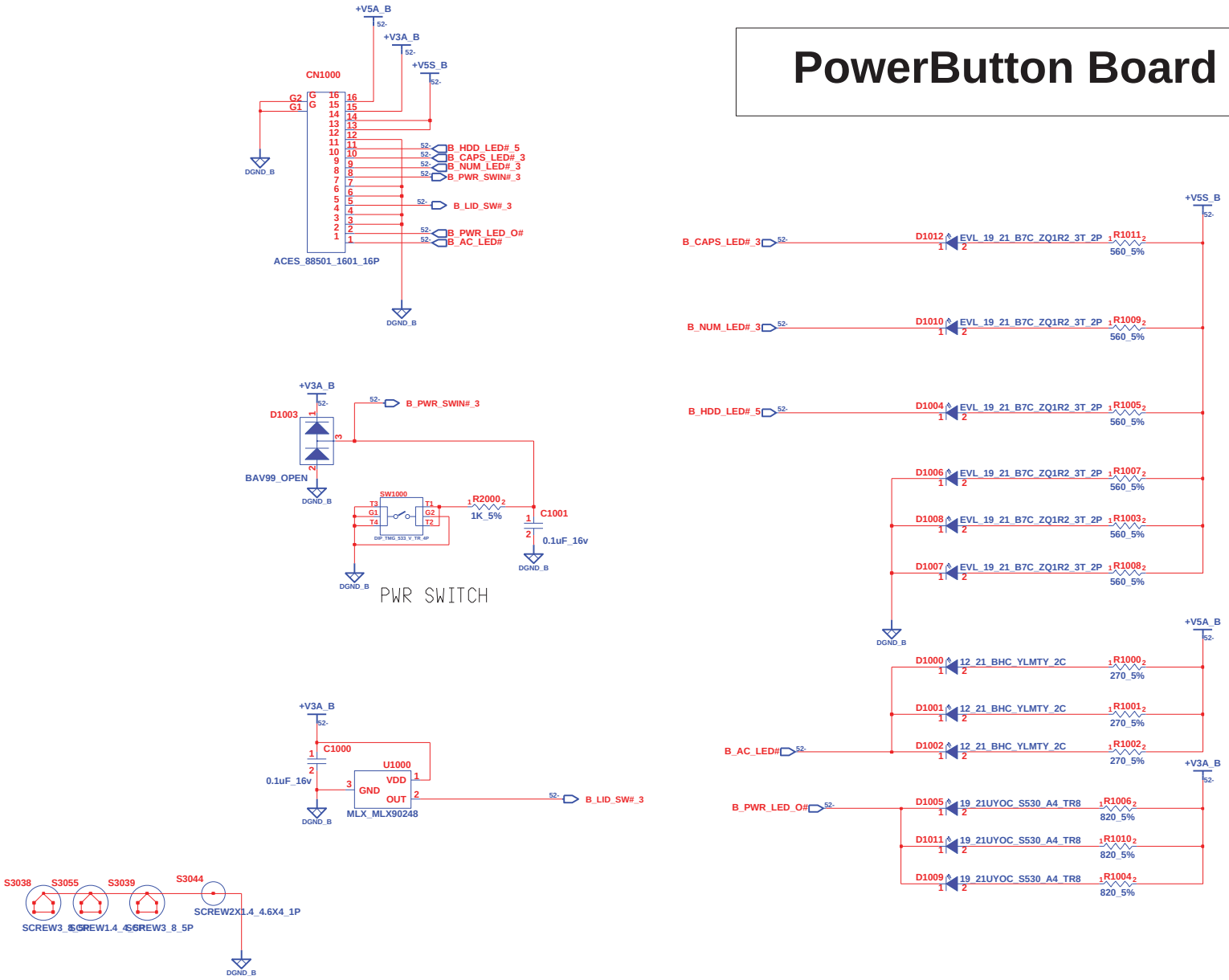

INVENTEC			
TITLE TETON POWER BUTTON BOARD			
SIZE A3	CODE CS	DOC. NUMBER Model_No	REV AX1
CHANGE by RDEE3	10-Dec-2007	SHEET 52 OF 54	

TOUCH PAD BUTTON BOARD

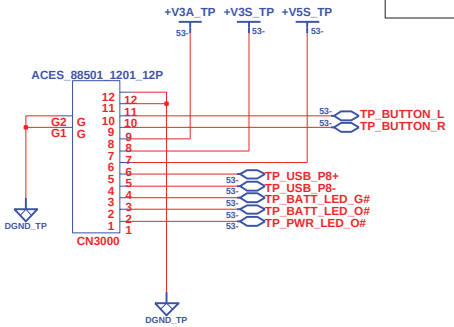

TO MB

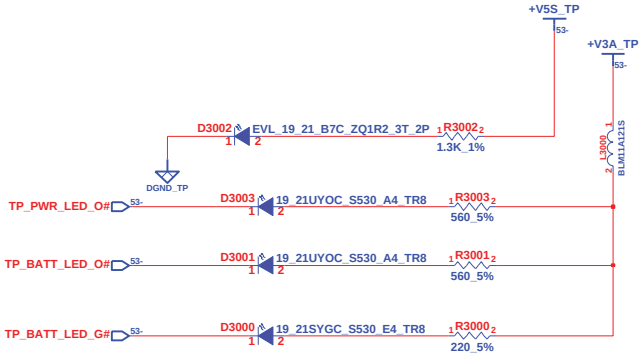

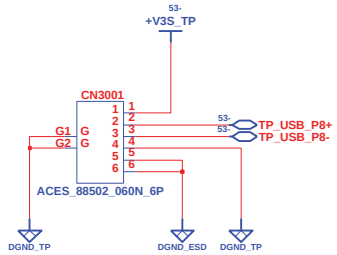

TO FINGER PRINT

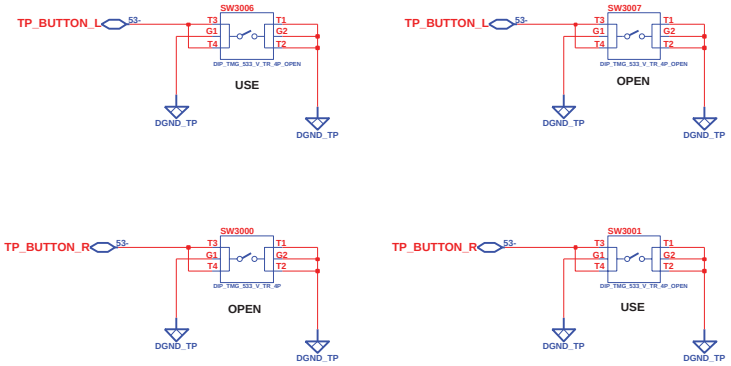

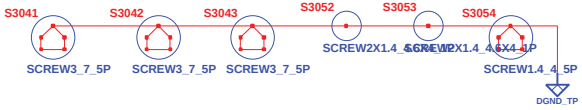

INVENTEC			
TITLE TETON TH BUTTON BOARD			
SIZE A3	CODE CS	DOC. NUMBER Model_No	REV AX1
CHANGE by RDEE3	10-Dec-2007	SHEET 53 OF 54	

HINGE LED Board 1

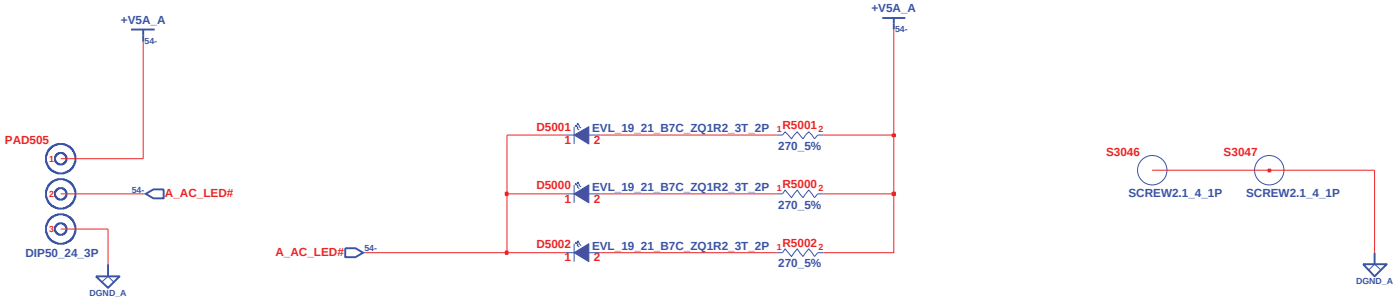

HINGE LED Board 2

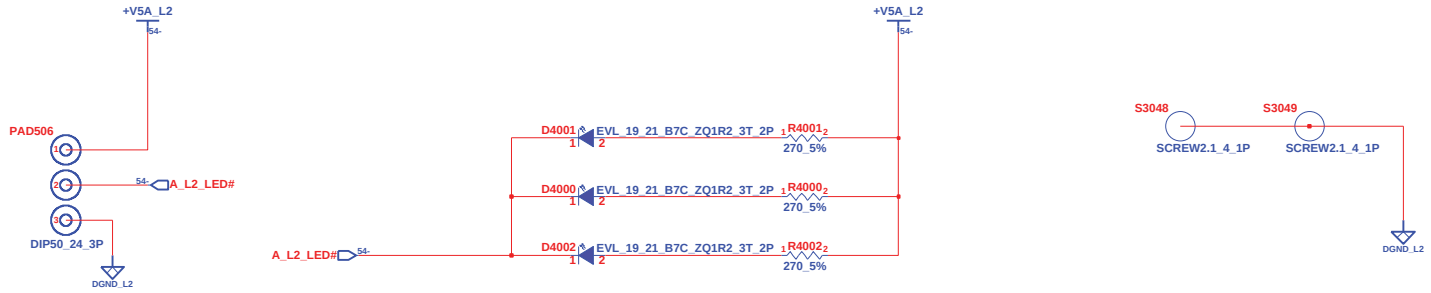

INVENTEC			
TITLE TETON PowerJack BOARD			
SIZE A3	CODE CS	DOC. NUMBER Model_No	REV AX1
CHANGE by RDEE3	10-Dec-2007	SHEET 54 OF 54	

I/O BOARD 1/2

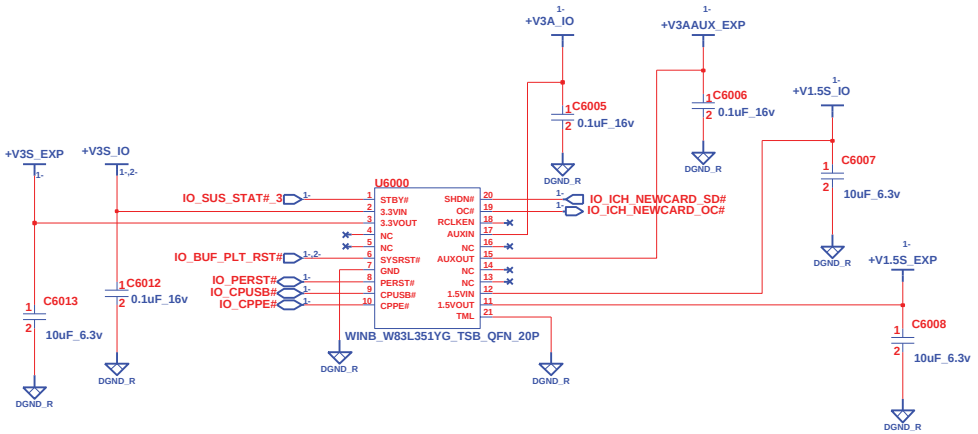

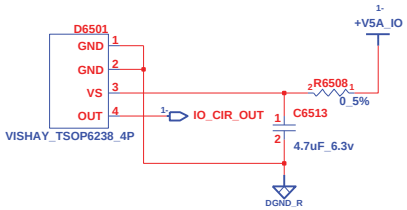

CIR

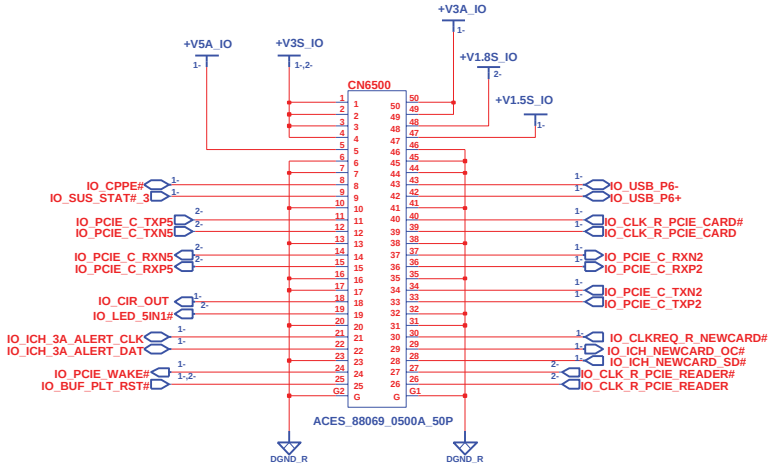

TO MB

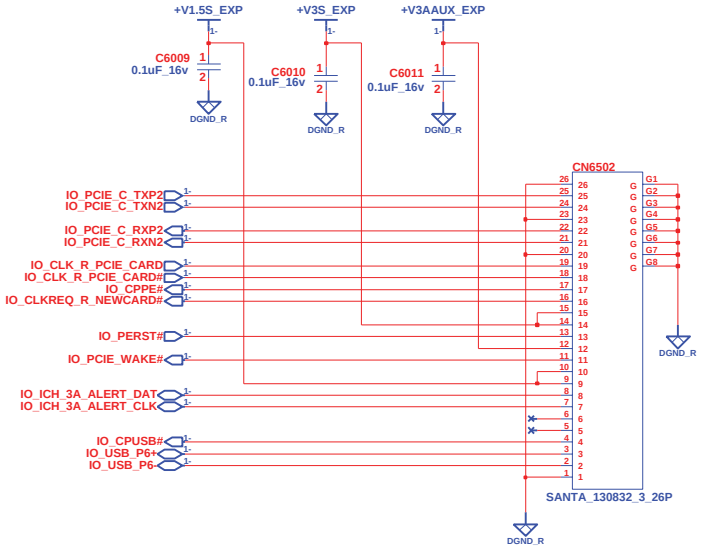

EXPRESS CARD

FIX6500 FIX6505 FIX6502 FIX6506 FIX6501 FIX6503 FIX6507 FIX6504
FIX_MASK

INVENTEC			
TITLE: TETON EXPRESS CARD & CIR			
SIZE A3	CODE CS	DOC. NUMBER Model_No	REV X01
CHANGE by RD-EE3	7-Oct-2007	SHEET 1 OF 3	

I/O BOARD 2/2

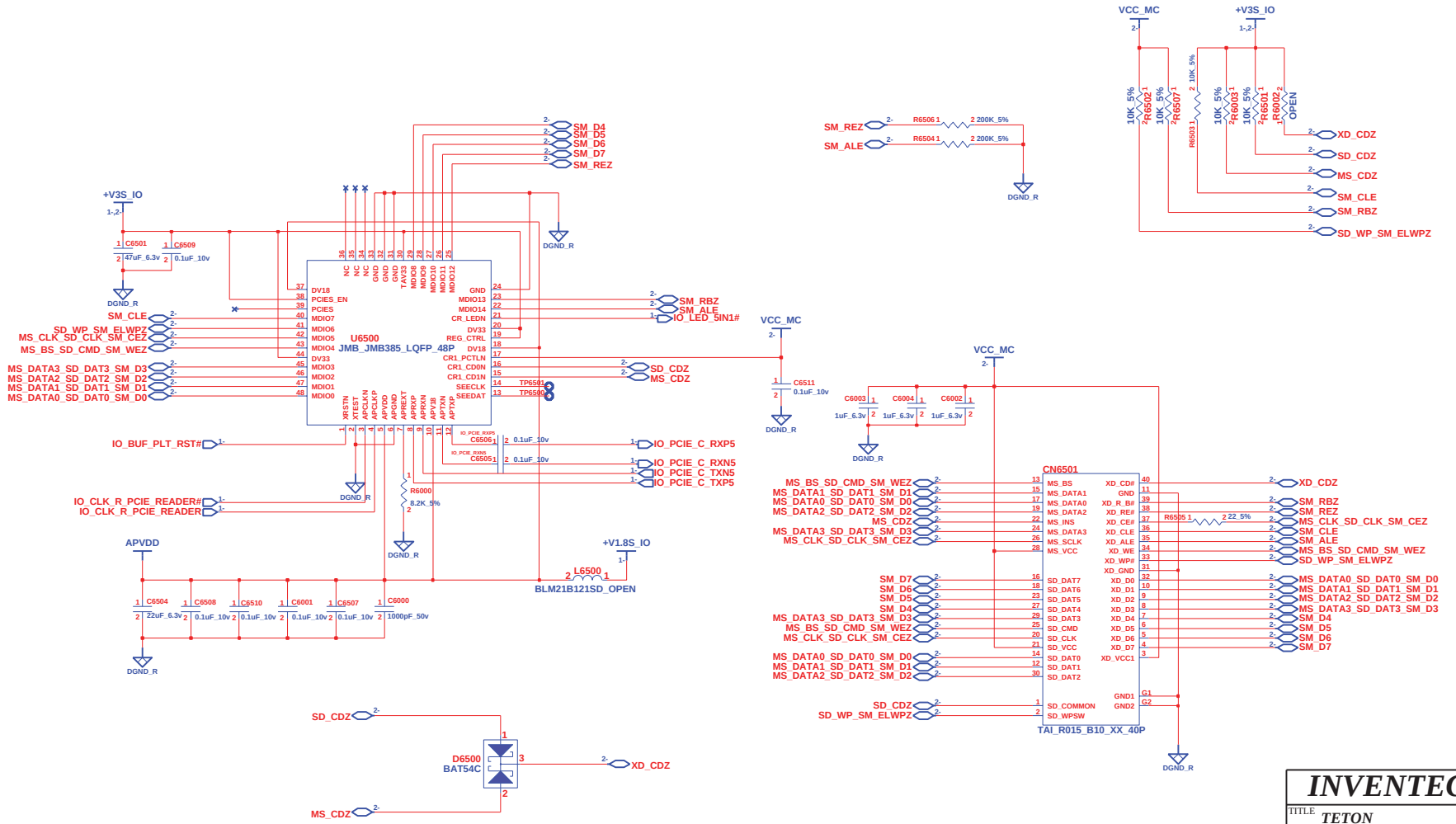

INVENTEC			
TITLE	TETON 6 IN 1 CARD CONN		
SIZE A3	CODE CS	DOC. NUMBER Model_No	REV X01
CHANGE by RD-EE3	7-Oct-2007	SHEET 2 OF 3	

Hotkey Board

(BLUE TOOTH LED)

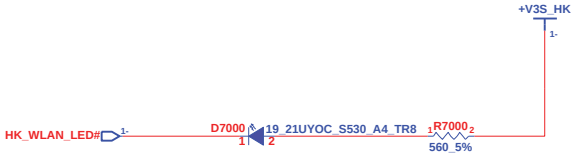

(WLAN LED)

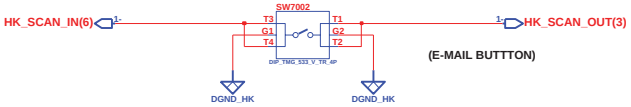

(E-MAIL BUTTTON)

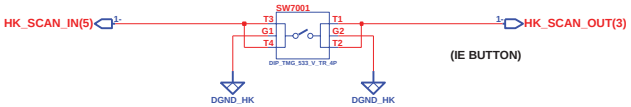

(IE BUTTON)

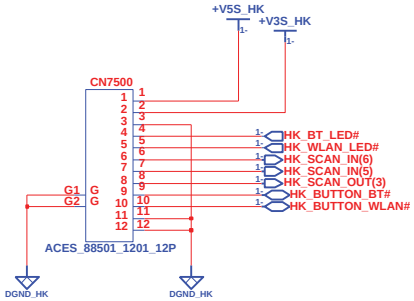

(BLUE TOOTH BUTTTON)

(WLAN BUTTTON)

TO MB PAGE50

INVENTEC			
TITLE TETON HOTKEY BOARD			
SIZE A3	CODE CS	DOC. NUMBER Model_No	REV X01
CHANGE by RD-EE3	7-Oct-2007	SHEET 1 OF 1	